STEPMILL® 7000
OWNER'S MANUAL

StairMaster®

THE RESULTS YOU WANT™

Printed in the United States.
© 2001 StairMaster® Health & Fitness Products, Inc.
All rights reserved.

Corporate Headquarters
12421 Willows Road N.E., Suite 100
Kirkland, WA 98034

(800) 635-2936
(425) 823-1825
Fax (425) 823-9490
www.stairmaster.com

StairMaster®

P/N 22869 - A

© 2001 StairMaster Health & Fitness Products, Inc. StairMaster and Stepmill are registered trademarks or trademarks of StairMaster Health & Fitness Products, Inc. in the United States and/or other countries. All other trademarks are trademarks of their respective companies. StairMaster is a Rutledge Capital company.

WARRANTY

This is to certify that the StairMaster® Stepmill® 7000 PT exercise system is warranted by StairMaster Health & Fitness Products, Inc. to be free of all defects in materials and workmanship. This warranty does not apply to any defect caused by negligence, misuse, accident, alteration, improper maintenance, or an “act of God”. This warranty is non-transferable from the original owner.

If, within three years from the date of purchase, any part of the StairMaster Stepmill exercise system should fail to operate properly (except any accessories), contact our Customer Service Department to report the problem. When calling, please be prepared to provide the customer service representative with the following information:

- Your name, customer number, shipping address, and telephone number
- The model and serial number of the inoperable machine
- The date(s) of purchase for the inoperable machine(s)
- Your billing address

This information will ensure that you are the only one ordering parts under your warranty protection. If warranty replacement parts are shipped to you, you may be required to return the inoperable part. To facilitate this process, the following policy has been established:

- Please call our Customer Service Department to receive a return materials authorization prior to shipment.
- StairMaster Health & Fitness Products, Inc. will incur all freight charges for warranty parts ordered for a machine that is less than 45 days old. The parts will be shipped to you via an overnight courier.*
- You are responsible for freight charges on warranty parts for machines that are more than 45 days old. You will not be responsible for the return shipment of the inoperable parts.
- Some inoperable warranty parts must be promptly returned to our Customer Service Department. We will pay the shipping cost for the inoperable warranty parts. Detailed instructions are included with each warranty replacement part.

StairMaster Health & Fitness Products, Inc. neither makes, assumes nor authorizes any representative or other person to make or assume for us, any other warranty whatsoever, whether expressed or implied, in connection with the sale, service, or shipment of our products. We reserve the right to make changes and improvements in our products without incurring any obligation to similarly alter products previously purchased. In order to maintain your product warranty and to ensure the safe and efficient operation of your machine, only authorized replacement parts can be used. This warranty is void if parts other than those provided by StairMaster Health & Fitness Products, Inc. are used.

* Note: Aerosol products cannot be transported via air.

PREFACE

The StairMaster® Stepmill® 7000 PT exercise system is a safe, functional, and effective exercise modality for developing aerobic fitness and increasing the strength of the major muscle groups of the lower body. It is designed for use by individuals of all ages and fitness levels. Your purchase of this machine is a positive affirmation of your commitment to use the best available methods for enhancing your functional fitness capabilities. In order to derive optimal benefits from your machine, you should read this manual thoroughly and adhere closely to the instructions.

WHAT IS IN THIS MANUAL?

Following the information on installation and a brief explanation of how the Stepmill 7000 PT exercise system works, this manual contains two major sections. The first section provides an explanation of how the machine should be used to achieve maximum results. The second section offers instructions and advice on how to properly maintain your machine. The “Appendix” contains additional information for the owner.

Throughout this Manual, whenever you are required to enter information into the console, the console keypad keystrokes are enclosed in [ ]. The names of the buttons and special console operational modes are shown in capital letters. For example, your machine is ready for use when the console displays "SELECT WORKOUT." Press the [MANUAL] button to start the MANUAL exercise program.

WHAT IS THE STAIRMASTER STEPMILL 7000 PT EXERCISE SYSTEM?

The StairMaster Stepmill 7000 PT exercise system is a vertical climbing machine with a rotating staircase which provides an aerobic workout equivalent to climbing stairs, without the impact loads and skeletal trauma common to most aerobic activities. Regular use of the Stepmill 7000 PT exercise system strengthens and conditions the heart and the following lower body muscle groups: gluteals, quadriceps, hamstrings, and calf muscles.

CONTENTS

SAFETY GUIDELINES **1**

INSTALLATION INSTRUCTIONS **3**

BASIC OPERATING INSTRUCTIONS **6**
General Guidelines for Safe Operation 6
Your First Workout on the StairMaster® Stepmill® 7000 PT Exercise System 7
Basic Instructions for First-Time Users 7
Rest periods 8

HEART RATE MONITORING **10**
Locked/Non-Locked Option 10
Error Messages 11

TELEMETRY (POLAR®) HEART RATE **12**
Using the Transmitter Belt 12
Maintaining the Transmitter Belt 13

7000 PT CONSOLE **14**
The Display Window 14
The Numeric Keypad 15
The Entertainment Keypad 15
The Intensity Level Keys 15
The Stop Key 15
The Workout Statistics 16
The Exercise Program Keypad 17
The Quick Start Option 17
The Manual Program 17
The Fat Burner Program 18
The Aerobic Training Program 18
The Speed Intervals Program 18
The Constant Heart Rate Program 19
The Fitness Test Programs 20
Understanding Submaximal Exercise Testing 20
Pretest Screening 22
The StairMaster Submaximal Fit Test 22
The Firefighter's Stair Climb Tests 25

Turning the CPAT Stair Climb Test on 26
Turning the NYCFD Stair Climb Test on 26
Console Codes 27

MAINTENANCE INSTRUCTIONS 31
Helpful Hints 31
Tool List 31
Maintenance Records 31
Initial Service 32
Preventative maintenance 32
Cleaning and Inspecting 32
Lubrication 33

TROUBLESHOOTING 36
General Troubleshooting Guidelines 36
Troubleshooting the Electrical System 36
The Console Fails to Power Up 36
Console Diagnostics Tests 39
The Display Test 39
The Keypad Test 39
The Serial Port test 40
The Alternator Test 40
The Tach Test 41
Error Reporting 41
The Telemetry (Polar®) Heart Rate Test 42
Speed Control Problems 43
Load Resistor Test 47
Troubleshooting the Drive Train 48

PARTS REMOVAL AND REPLACEMENT 51
Covers 51
Side Covers 51
Top Cover 51
Back Cover 52
Bottom Cover 52
Console 52
Poly-V Belt 53
Drive Chain 53

CONTENTS

Step Assembly 54
Step Chain Assembly 55
Upper (and Lower) Sprocket Assembly 57
Cable Assembly 59
Transmission Assembly 60
Alternator Assembly 61
Relay/Resistor Assembly 62

GROUNDING INSTRUCTIONS 64

FCC COMPLIANCE 65

CANADIAN DOC CLASS A COMPLIANCE 65

APPENDICES
Important Phone Numbers 66
Figures 6 - 12 67

LIST OF TABLES
Table 1. Dimensions and Specifications for the StairMaster® 7000 PT Exercise System 3
Table 2. Fitness Rating Norms 14
Table 3. Recommended Preventive Maintenance Schedule 35

LIST OF ILLUSTRATIONS
Figure 1: Correct Exercise Position 9
Figure 2: Transmitter Belt 13
Figure 3: The Stepmill 7000 PT Console 14
Figure 4: StairMaster Fitness Protocol 24
Figure 5: Grounding System 64
Figure 6: Side Cover and Handrail Assemblies 67
Figure 7: Cover Fasteners 68
Figure 8: Step Assembly 69
Figure 9: Step Chain and Sprocket Assemblies 70
Figure 10: Transmission and Alternator Assemblies 71
Figure 11: Wiring Diagram 72
Figure 12: Relay Board 73

WHEN USING ELECTRICAL EQUIPMENT, ALWAYS FOLLOW THESE BASIC PRECAUTIONS:

IMPORTANT SAFETY INSTRUCTIONS

This symbol appearing throughout this manual means Attention! Be Alert! Your safety is involved.

The following definitions apply to the words “Danger” and “Warning” found throughout this manual:

DANGER - Used to call attention to IMMEDIATE hazards which, if not avoided, will result in immediate, serious personal injury or loss of life.

WARNING - Used to call attention to POTENTIAL hazards that could result in personal injury or loss of life.

READ ALL INSTRUCTIONS BEFORE USING THE MACHINE.

DANGER To reduce the risk of electrical shock, always unplug the external power supply from the AC wall outlet before cleaning, maintaining, or repairing.

WARNING To reduce the risk of burns, electric shock, or injury to persons:

1. The external power supply should always be unplugged from the AC wall outlet before removing or installing parts. Never make adjustments or repairs while an exercise program is in progress.

2. Close supervision is necessary whenever the machine is used by or near children, invalids, or disabled persons.

3. Keep your hands away from all moving parts and keep your feet on the pedals while exercising. Do not operate the machine with the side covers removed.

SAFETY GUIDELINES

4. Use this machine only for its intended use as described in this Manual. Do not use parts, attachments, or accessories other than those provided by StairMaster® Health & Fitness Products, Inc.

5. Do not use the external power supply if it has a damaged cord or plug, or if it is not working properly, if it has been dropped or damaged, or dropped into water. Contact our Customer Service Department at 1-800-331-3571 to arrange for the return of damaged parts.

6. Connect the external power supply to a properly grounded AC wall outlet; refer to the "Grounding Instructions" section. Keep all cords away from heated surfaces.

7. To disconnect the external power supply, remove the plug from the AC wall outlet.

8. Never drop or insert any object into any opening on the machine.

9. Do not operate where aerosol (spray) products are being used.

10. Always wear insulated gloves when handling batteries.

11. Do not use the machine outdoors.

The safety level given by the design of this equipment can only be maintained when the equipment is regularly examined for damage and wear. Inoperable components shall be replaced immediately or the equipment shall be put out of use until it is repaired. Failure to follow all guidelines may compromise the effectiveness of the exercise experience, expose yourself (and possibly others) to injury, and reduce the longevity of the machine. Follow all training instructions listed in the manual and/or on the machine. Physical injury may result from incorrect or excessive training.

SAVE THESE INSTRUCTIONS

INSTALLATION INSTRUCTIONS

Before leaving the manufacturing facility in Tulsa, Oklahoma, your StairMaster® Stepmill® 7000 PT exercise system was thoroughly inspected and tested for proper operation. To minimize shipping damage, careful attention was given to making your machine ready for shipment.

The dimensions of the machine are listed in Table 1. Throughout this manual, all references to the left or right side and to the front or back are made as if you were on the machine, ready to exercise.

Table 1. Dimensions and Specifications for the StairMaster 7000 PT Exercise System

Physical Dimensions:	
Length	50.0 inches (127 cm)
Width	29.0 inches (74 cm)
Height	78.0 inches (198 cm)
Weight	409 pounds (186 kg)
Power Supply Specifications:	
Output Voltage	12 to 19 VDC
Output Current Capacity	2.5 amps
Input Power Consumption	55 watts

The machine requires minor assembly before operation. You will need a pair of diagonal cutters or a pair of heavy-duty scissors. The Stepmill 7000 PT exercise system must be placed on a solid, level floor near an AC wall outlet. A minimum ceiling height of 9 feet (2.8 meters) and a doorway width of 29 inches (74 cm) is required.

1. Roll the machine to its desired location on its temporary wheels.

2. Have an assistant tilt the machine forward until the wheels are off the floor. Make sure the assistant can support the machine so you can remove the temporary wheels.

INSTALLATION INSTRUCTIONS

3. Remove the clevis pin from each wheel (See Drawing Below) and remove the wheels from the frame.

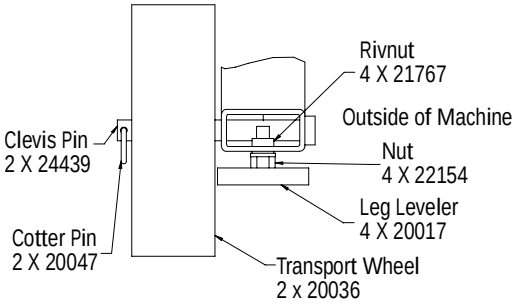

4. Help your assistant lower the machine to the floor. Install and adjust the leg levelers as necessary to level the machine (see Above).

5. If your machine was shipped outside North America, it will need additional assembly (if this is not the case, skip to step #6).

   - Use the fastener removal tool to remove the 8 fasteners on the back panel.
   - Mount both handrails onto the frame as shown in Figure 6.
   - Push the console cable assembly through the grommet in the frame and connect it to the main cable assembly (refer to Figure 6).
   - Install the console mount onto the handrails (refer to Figure 6).
   - Install the console and connect the console cable.
   - Reinstall the back panel and go to step #6.

6. Unwrap the power supply assembly from the console and connect the DC power cable from the power supply to the power connector located on the bottom cover.

7. Place the power supply on the floor near an AC wall outlet. To reduce the hazard of electrical shock, place the power supply in a location away from the machine and away from exposure to perspiration. You should not place your power supply on a carpet because it may overheat.

8. Check to be sure that the input AC power rating marked on the power supply matches the available power. If it does not, obtain the matching power supply from StairMaster® Health & Fitness Products, Inc. before proceeding any further.

WARNING

TO REDUCE THE RISK OF ELECTRICAL SHOCK AND FIRE AND TO PREVENT SEVERE DAMAGE TO THE MACHINE, USE ONLY THE POWER SUPPLY APPROVED FOR USE WITH THIS EQUIPMENT. IN ADDITION, YOUR MACHINE MUST BE PROPERLY GROUNDED.

9. Connect the AC power cord to the AC wall outlet. Refer to the “Grounding Instructions” section of the Manual if the AC wall outlet does not accept a three-prong plug.

10. Watch the console. The console should display a software revision code and then show “SELECT WORKOUT.” If it does not, unplug the power supply and then plug it back in. If the sound and/or the display are still not present, contact the Customer Service Department at 800-331-3578. International customers should call their local distributor; refer to the Appendix for the phone number of the office nearest you.

11. When the console displays “SELECT WORKOUT”, your Stepmill® 7000 PT exercise system is ready to use.

12. Custom-length DC cables and other accessories are available. Refer to the Appendix for the phone number of the office nearest you.

BASIC OPERATING INSTRUCTIONS

GENERAL GUIDELINES FOR SAFE OPERATION

WARNING

THESE GUIDELINES ARE DIRECTED TO YOU, AS THE OWNER OF THE MACHINE. YOU SHOULD INSIST THAT ALL USERS FOLLOW THE SAME GUIDELINES. YOU SHOULD MAKE THIS MANUAL AVAILABLE TO ALL USERS.

1. Obtain a complete physical examination from your medical doctor and enlist a health/fitness professional's aid in developing an exercise program suitable for your current health status.

2. When working out for the first time, use the MANUAL exercise program at the lower speeds until you feel comfortable and capable of faster speeds.

3. The speed and duration of your exercise program should always be subject to how you feel. Never permit peer pressure to exceed your personal judgment while exercising.

4. Overweight or severely deconditioned individuals should be particularly cautious when using the machine for the first time. Even though such individuals may not have histories of serious physical problems, they may perceive the exercise to be far less intense than it really is, resulting in the possibility of overexertion or injury.

5. Although all equipment manufactured by StairMaster Health & Fitness Products, Inc. has been thoroughly inspected by the manufacturing facility prior to shipment, proper installation and regular maintenance are required to ensure safety. Maintenance is the sole responsibility of the owner.

YOUR FIRST WORKOUT ON THE STAIRMASTER® STEPMILL® 7000 PT EXERCISE SYSTEM

Basic Instructions for First-Time Users

1. Warm up with light calisthenics and easy stretching exercises for at least five minutes before beginning your exercise program.

WARNING

IF AT ANY TIME DURING YOUR WORKOUT YOU FEEL CHEST PAIN, EXPERIENCE SEVERE MUSCULAR DISCOMFORT, FEEL FAINT, OR ARE SHORT OF BREATH, STOP EXERCISING IMMEDIATELY. IF THE CONDITION PERSISTS, YOU SHOULD CONSULT YOUR MEDICAL DOCTOR IMMEDIATELY.

2. Hold onto the handrails and step up onto the staircase. Stand up straight. The steps will rotate slowly.

3. Select the MANUAL exercise program so you can control the pace of your first workout and get used to the exercise motion.

4. Press [MANUAL] and then [ENTER]. The console will return to the start screen if you do not press [ENTER] within ten seconds.

5. The console will prompt you to enter your body weight. Enter your weight in pounds (or kilograms if the console is set up for metric units). Correct entry errors by pressing [CLEAR] before you press [ENTER].

6. The console will prompt you to enter the workout time in one-minute increments between five and 99 minutes. Press [1], [0], [ENTER] to exercise for ten minutes.

7. Step up with one foot at a time. Try to stay towards the top of the staircase. As you become comfortable with exercise motion, press [LEVEL: ∧] and [LEVEL: ∨] to adjust your climbing speed.

8. Relax as much as possible while exercising and maintain an erect posture. Use the handrails for balance. Don't lock your elbows or lean on the console. Supporting your weight will reduce the exercise intensity and the console will overestimate the number of calories burned.

9. Select a speed (or intensity level) that allows you to step towards the top of the staircase. Faster is not always better. Exercise at a level that is consistent with your fitness level.

Rest Periods

10. You can stop and rest as many times as necessary for up to one minute for each rest period during all programs. To stop, either press [STOP] or step off the machine. The console returns to the start screen if you rest longer than the allotted rest period. Follow the onscreen prompt to continue your work out after a rest period.

Cool Down

11. When you are finished with your workout, the machine will slow down and the message "GOAL ATTAINED" will be displayed. You can cool down on the machine by continuing to step. The console timer will continue to count up from the selected time, and the intensity level will default to level 3. If there is a time limit set on the console, the timer will last only until the maximum time has been met. For example, if the time limit was set for 30 minutes and you worked out for 25 minutes, the cool down period would last for 5 minutes, or until you stepped off the machine.

12. You can also cool down by getting off the machine walking or stretching for at least five minutes.

Figure 1: Correct Exercise Position

Chest/Shoulders - Keep your shoulders square and centered over your hips with your chest lifted.

Head - Keep your chin parallel to the floor. Avoid staring at your feet or the computer console. This posture will also enhance your breathing.*

Hands - Rest your hands lightly on the side rails or front handlebars. Excessive leaning on the side rails can reduce calorie burn by up to 20%.

Back - Although the whole body is in a slightly forward slant, keep your back straight and avoid bending at the waist.

Hips/Torso - Keep your hips directly under you with the buttocks slightly contracted. Avoid letting your hips rock from side to side with each step.

Elbows - Keep both elbows slightly bent. If you have good balance and want to burn more calories, you can pump your arms back and forth as if you were running.

Knees - Keep your knees aligned with your toes. Avoid training with your knees too far past your toes and keep your feet pointing forward. Do not hyperextend your knees.

Legs - Use a full, pain-free range of motion with each step, straightening your legs as far as possible without causing discomfort or letting your knees lock out.

Feet - Step squarely in the middle of each step.

**Please note that in the photo the person has his head turned - keep your head facing forward as you exercise.*

HEART RATE MONITORING

HEART RATE INPUT

The 7000 PT console uses telemetry (e.g., Polar®) heart rate signal detection. Ensure that your console is set up for telemetry signal detection only. There is a short “lock out” period at the beginning of each workout session during which the console first detects a signal and then validates the signal type.

- Telemetry heart rate - after the initial belt signal is detected, the console will enter a validation phase in which four good heart beat signals within four seconds are required before locking on telemetry heart rate signals for the duration of the workout session. During the validation phase the console will not recognize contact heart rate signals.

Locked/Non-locked Option

When the “not locked” option is selected the heart rate source signal is not fixed during the exercise (if the signal is lost either input will be valid). If the “locked” option is selected then the heart rate source signal is locked on the first detected signal during the workout. To set a heart rate signal input, or to turn off the heart rate option all together, perform the following steps:

1. On the console keypad, press [LEVEL: ∧], [3], [2]. At this point the screen will display “HR INPUTS.” Press [ENTER] to select this option.

2. There are 4 options to handle heart rate input signals. Only 2 of those options are appropriate for the 7000 PT; "Both HR Off", and "Telemetry Only." Press the [SELECT] key to scroll past the other options until you find either "Both HR Off" or "Telemetry Only." Press the [ENTER] key to select the desired option.

“TELEMETRY ONLY“ - locks out contact heart rate signals and will only detect telemetry signals. Set your console to this default.
“BOTH HR OFF“ - turns off the ability to detect any signal at all. Used in rare situations where there is excessive interference with the heart rate signals. This option turns off disables the Constant HR program and the Fitness Test program.

Error Messages

Text line messages are only seen in the Constant Heart Rate and Fitness Test programs due to the design of the program that necessitates a valid heart rate signal at all times during the program.

“**CHECK HR BELT**” - The heart rate signal has been missing for the last 30 seconds in telemetry signal detection.
“HR BELT NEEDED” - No telemetry belt signal been sensed during the initial setup time.
“**HR MODE DISABLED**” - No heart rate signal is allowed due to the set up option that was chosen. Heart rate monitoring is not possible.

TELEMETRY HEART RATE

The StairMaster® Stepmill® 7000 PT features telemetry (Polar®) heart rate monitoring. The system consists of the receiver, located on the stepper, and a transmitter belt (purchased separately) worn across your chest. The monitoring function is activated as soon as you strap on the chest belt and step within range of the receiver in the machine. Two electrodes on the underside of the chest belt sense the heart rate signal and send it to the receiver. The heart symbol on the console pulses to indicate that the console is receiving a valid signal. A microprocessor in the console calculates the heart rate and displays it, in beats per minute, on the console.

Using the Transmitter Belt

WARNING

PACEMAKER USERS SHOULD NOT USE THE POLAR TRANSMITTER BEFORE CONSULTING THEIR DOCTOR.

Before you put the transmitter belt on, wet the two electrode patches (the grooved rectangles on the reverse side of the belt). Secure the transmitter belt as high under the pectoral muscles (chest) as is comfortable. The transmitter belt should fit snugly and comfortably, and allow normal breathing. When the console detects a heart rate signal, heart rate is shown in the display automatically. Your heart rate in beats per minute and a pulsing heart icon are displayed on the console.

After the initial belt signal is detected, the console will enter a validation phase in which four good heart beat signals lasting four seconds each are required before locking on telemetry heart rate signals for the duration of the workout session. During the validation phase the console will not recognize contact heart rate signals. If you do not see a heart rate on the console, try one of the following:

- Move closer to the console.

- Tighten the elastic part of the chest belt.
- Adjust the belt higher or lower on your chest.
- Remoisten the electrodes.
- Test your chest strap with a machine that you know is working, or with a heart rate watch that you know is working.
- If possible, replace or exchange your console with a console (from the same type of machine) that you know is working and retest the machine.
- Visually check that the heart rate receiver is positioned correctly in the neck cover. The heart rate receiver jack should point down. Ensure that the heart rate receiver is connected to the console, and that the connection is not loose. If possible, swap the heart rate receiver with one from another machine.

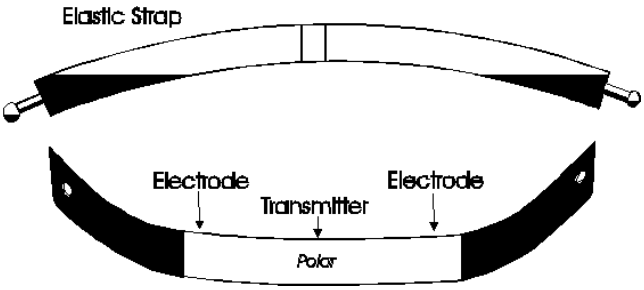

Figure 2: Transmitter Belt

Maintaining the Transmitter Belt

Clean the chest belt regularly with mild soap and water, then dry thoroughly - residual sweat and moisture keep the transmitter active and drain the battery in the transmitter. Do not use abrasives or chemicals such as steel wool or alcohol for cleaning, as they can damage the electrodes permanently. You can order replacement belts from StairMaster, Polar Electro, Inc., or your local fitness store:

StairMaster	800-331-3578	P/N 64000
Polar Electro, Inc.	800-227-1314	

7000 PT CONSOLE

The StairMaster® Stepmill® 7000 PT exercise system console is divided into seven sections: the display window, the workout options, the numeric keypad, the entertainment keypad, the workout statistics, the stop key, and the intensity level keys (see Figure 3).

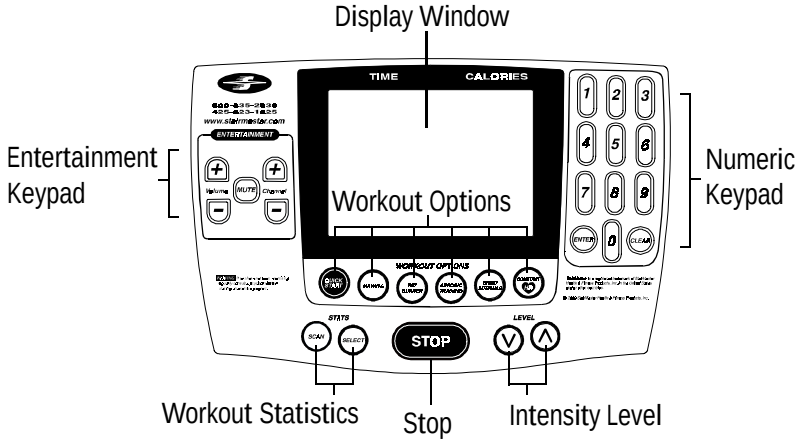

Figure 3: The Stepmill 7000 PT Console

THE DISPLAY WINDOW

• ***Time*** - The selected workout time is displayed in the upper left section of the display window. Once the time is entered, the timer will count down, in minutes and seconds, until the workout is finished or stopped. If [0] is entered in the MANUAL or CONSTANT HEART RATE program, the timer will count up.

• ***Calories*** - The real-time amount of calories burned is continually updated and displayed in the upper right section of the display window.

• ***Interval Timer*** - The interval timer is displayed below the Time. The interval timer counts down time left within each interval.

• ***Heart Rate*** - Current heart rate is displayed below the Calories, next to the heart icon.

• ***Workout Option Profile*** - A profile of the selected exercise program appears in the lower section of the display window during a workout. The taller the column, the higher the intensity (watts) for that interval. The flashing column shows your current interval. The flashing column moves from left to right across the display as you complete each interval.

THE NUMERIC KEYPAD

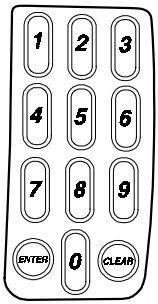

The numeric keypad is located on the right side of the console. Before the exercise program begins, the numbers are used to enter data in response to the console prompts.

• ***Enter*** - Confirms workout selections and stores the information used by the console to calculate workout statistics.

• ***Clear*** - Erases information from the console memory if pressed before [ENTER].

THE ENTERTAINMENT KEYPAD

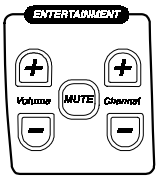

The FreeClimber comes equipped to facilitate the use of commercial entertainment systems. Using any of these keys will send an output signal through the Communication Specification for Fitness Equipment (C.S.A.F.E.) port to a connected C.S.A.F.E. or compatible system. If a system is not connected, pressing these keys will have no effect.

• ***Volume Up/Down*** - Increases or decreases the volume level of the audio source.

• ***Mute*** - Removes the audio sound from the headphones.

• ***Channel Up/Down*** - Changes the channel of the commercial entertainment system.

THE INTENSITY LEVEL KEYS

The exercise intensity level may be changed at any time during a workout. Pressing the [∨] key decreases the intensity and pressing the [∧] key increases the intensity.

STOP KEY

Press the [STOP] key any time you want to pause the exercise program for up to one minute. Press [STOP] a second time, or [1], and The console will return to the "SELECT WORKOUT" Prompt.

THE WORKOUT STATISTICS

During the exercise program, the Stats keys are used to track workout statistics which are then shown in the display window. Pressing the [SELECT] key turns off the scanning feature and shows the statistic of choice in the display window. Pressing the [SCAN] key will prompt the console to cycle through the following statistics:

• ***Distance*** - Provides a cumulative total of the equivalent distance (in miles or kilometers), you would have traveled while riding a bicycle outdoors at the same relative intensity.
• ***Calories/Hour*** - Provides a running total of the number of calories burned during a workout.
• ***Rate -*** Displays the current steps per minute.
• ***Floors*** - Displays the equivalent number of floors climbed with an 8-inch step. There are 16 steps per floor, and 48 floors per mile.
• ***Level*** - Shows the current intensity level between 1 (the easiest) and 20 (the hardest).
• ***Watts*** - Displays the exercise intensity in watts (746 watts = 1 horsepower).
• ***METs*** - Gives you the relative energy cost of exercise. MET stands for multiples of the resting metabolic rate. While you are sitting quietly, your body consumes oxygen at the rate of about 3.5 milliliters per kilogram of body mass per minute. When you exercise, your body needs more oxygen in order to function. For example, exercising at 10 METs requires ten times the resting rate of oxygen consumption, or about 35 milliliters per kilogram per minute. During a workout, this key shows the current MET level. During the workout summary, the average MET level is displayed.
• ***Target Heart Rate*** - Available only during the Constant Heart Rate program. Shows the selected target heart rate.

At the completion of a workout, the statistic averages are calculated based on the accumulation of data during the workout program, and not including the cool down period.

THE EXERCISE PROGRAM KEYPAD

The exercise keypad is located below the display and to the left of the function keypad. While the console is in the "SELECT WORKOUT" mode, press one of the exercise program keys to preview the desired workout. There are six workout programs with the following standard defaults (pressing [ENTER] without inputting data first will prompt the console to enter these values):

- **Weight** - 175 lbs.
- **Intensity Level** - 3
- **Workout Time** - The default time in the programmed workouts and Quick Start is 20 minutes. The Manual and Constant Heart Rate programs do not have a specified default time. In these programs, the console timer will count up to the maximum time of 99 minutes, and then return to 0.
- **Age** (Constant Heart Rate program only) - 40 years

Once you have selected a program, the prompts are:

- "**ENTER BODY WEIGHT**" - type in your body weight in pounds (or kilograms if your console is set to metric units).
- "**ENTER LEVEL 1 - 20**" - select your intensity level with level 1 being the easiest and level 20 the hardest.
- "**ENTER TIME 5 - 99**" - select the workout duration in one minute increments from 5 to 99. Press 0 in the MANUAL and CONSTANT HEART RATE program to workout for an unspecified amount of time.

The Quick Start Program

Provides an immediate start, without having to enter any user information. This program uses the standard default settings for derivation of calories burned.

The Manual Program

After pressing the [MANUAL] key, enter user and workout information. Begin exercising at the selected level. If desired, adjust the workout manually by using the intensity level arrow keys. The profile in the display window is divided into 15 equal intervals within the workout time. The profile is based

on the selected intensity level, with 2 levels equating to one vertical bar.

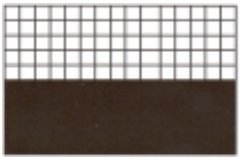

The Fat Burner Program

The Fat Burner program is a 60-interval workout designed for people just starting a weight control program. The relative intensity level is indicated on the profile and any changes in the intensity level will continue for the remainder of the program.

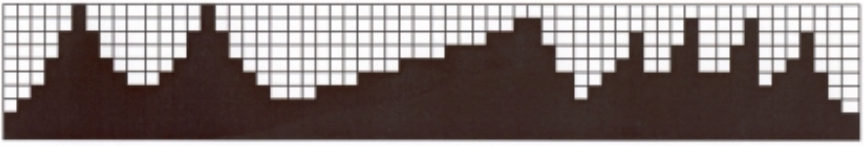

The Aerobic Training Program

The Aerobic Training program is a 60-interval workout designed to increase aerobic capacity. The relative intensity level is indicated on the profile and any changes in the intensity level will not change the look of the remaining profile.

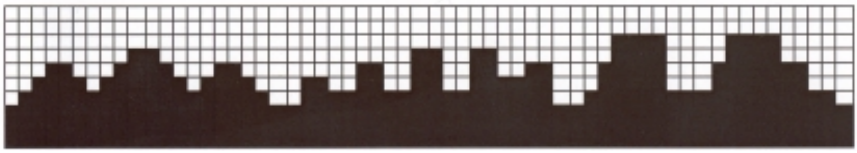

The Speed Intervals Program

The Speed Intervals program is a workout with 8-rest intervals and 7-exercise intervals that alternate speed/intensity level changes. You can change the REST interval speed/level and the EXERCISE interval speed/level independently, using the level keys. For example, if you decrease the intensity level during a rest interval then subsequent rest intervals will be the same. However, the EXERCISE interval remains at the same intensity level you started with. To change the intensity level of the EXERCISE interval, you must change the intensity level

during an EXERCISE interval. The intensity level shown during an EXERCISE interval is indicative of your current speed. However, the current speed during a REST interval is equal to a scaled percentage of the displayed intensity level. Note that the program profile does not change at any time during the workout session.

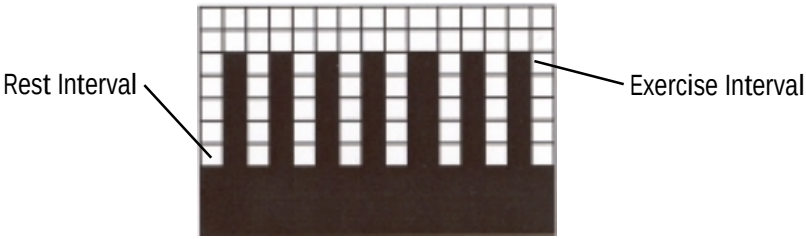

The Constant Heart Rate Program

The Constant Heart Rate program maintains a chosen target heart rate by automatically varying the climbing speed during each workout. The default target heart rate is equal to 70% of your maximum heart rate which is calculated by the following equation: 220 - (Age) x .70. Choose a different target heart rate (between 80 and 180 beats per minute) at any time during the workout by using the numeric keypad to enter the new target heart rate, followed by the [ENTER] key. The following messages may be shown during a workout:

- "**CHECK HR BELT**" - The heart rate signal has been missing for the last 30 seconds in telemetry signal detection.
- **"HR BELT NEEDED" -** No telemetry belt signal has been sensed during the initial setup time.
- **"HOLD HR SENSORS" -** In contact heart rate signal situations this message will come every 30 seconds to prompt the user to hold the sensors.
- "**HR MODE DISABLED**" - No heart rate signal is allowed due to the set up option that was chosen. Heart rate monitoring is not possible.

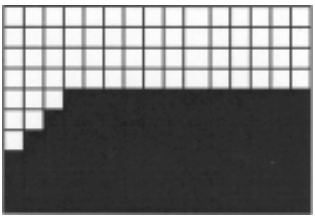

The Fitness Test Programs

Understanding Submaximal Exercise Testing

Before using the StairMaster FreeClimber for submaximal exercise testing, it should be noted that all submaximal fitness tests make several assumptions:

- That a steady-state heart rate is obtained for each exercise workload.
- That a linear relationship exists between heart rate, oxygen up take and workload.
- That the maximal heart rate for a given age is uniform.
- That the mechanical efficiency of the physical activity performed (i.e., oxygen uptake at a given workload) is the same for every one.

It should be kept in mind that any one or all of the above mentioned assumptions may not be met during a submaximal exercise test. If for any reason one of the assumptions is not met, then errors in predicting $VO_{2\,max}$ will occur.

Unfortunately, it is often quite difficult to meet all of the requirements for the four listed assumptions. For example, exercising at a given workload for only a few minutes can involve an insufficient amount of time for many individuals to achieve a true steady-state. To ensure that a steady-state has been achieved, the heart rate should be measured after two minutes of exercise at a given workload and again after the third minute of exercise at that workload. These two heart rates should then be compared. If a difference of more than five beats per minute between the two is found, the subject should continue to exercise at one-minute intervals at the same workload until two successive heart rates differ by less than five beats per minute.

It is also important that the submaximal heart rates obtained be between 115 and 150 beats per minute, because it is within this heart rate range that a linear relationship tends to exist between heart rate and oxygen uptake or workload for most adults. When the heart rate is less than 115, many external factors (e.g., talking, laughing, apprehension, etc.) can greatly influence heart rate. Once the heart rate reaches a level between 115 and

150, external factors no longer influence heart rate, and a linear relationship exists. As the heart rate rises above 150, the heart rate-oxygen uptake relationship becomes curvilinear.

The third assumption involves maximal heart rate. Maximal heart rate is the greatest heart rate that can be measured when an individual is exercising to the point of volitional fatigue (i.e., exhaustion) during a graded exercise test. Several equations have been developed to estimate the average maximal heart rate for humans:

- Maximal heart rate = 220 minus age (low estimate)
- Maximal heart rate = 210 minus [0.5 x age] (high estimate)
- Maximal heart rate = 226 minus age (estimate for older individuals)

Maximal heart rate can, however, vary greatly among different individuals of the same age. One standard deviation is $^{+}$ 12 bpm, which means that two-thirds of the population varies an average of plus or minus 12 heart beats from the average given by a prediction equation. If an individual's age-predicted maximal heart rate is higher than that person's true maximal heart rate, then his/her estimated $VO_{2\ max}$ will be an overestimation of the correct or actual value.

The final assumption addresses the issue of mechanical efficiency. Because oxygen uptake at any given work rate can vary by approximately 15% between different individuals, individuals vary in the amount of oxygen they require to perform a certain exercise workload. Some individuals are more efficient at performing a given task than others. As a result, the average oxygen consumption associated with a given workload may vary significantly from one person to another. Thus, $VO_{2\ max}$ predicted by submaximal exercise tests tends to be overestimated for those who are mechanically efficient and underestimated for those who are inefficient.

The point to remember is that submaximal exercise testing, though not as precise as maximal exercise testing, is not without advantages. For example, the results of such testing can provide a fairly accurate reflection of an individual's fitness status without the cost, risk, effort (on the part of the subject) and time involved in max testing. If an individual is given repeated

submaximal exercise tests and that person's heart rate response to a fixed workload is found to decrease over time, it is reasonably safe to conclude that the individual has made improvements in aerobic (cardiorespiratory) fitness, irrespective of the accuracy of the $VO_{2\,max}$ prediction.

Pretest Screening

Prior to any exercise test (maximal or submaximal), participants should complete a brief health/medical questionnaire, have their resting blood pressure and heart rate measured, and provide an informed consent form. The Physical Activity Readiness Questionnaire (PAR-Q) is an example of a valid health/medical questionnaire for screening individuals prior to submaximal exercise testing. Canadian health and fitness practitioners have extensively (and quite successfully) used the PAR-Q to determine whether individuals should be given an exercise test. A "yes" answer to any of the seven questions on the PAR-Q would disqualify a participant from taking part in an exercise test until appropriate medical clearance was obtained.

PHYSICAL ACTIVITY READINESS QUESTIONNAIRE (PAR-Q)

1. Has your doctor ever said you have a heart condition and recommended only medically supervised physical activity?
2. Do you have chest pain brought on by physical activity?
3. Have you developed chest pain within the past month?
4. Do you tend to lose consciousness or fall over as a result of dizziness?
5. Do you have a bone or joint problem that could be aggravated by the proposed physical activity?
6. Has a doctor ever recommended medication for your blood pressure or a heart condition?
7. Are you aware, through your own experience or a doctor's advice, of any other physical reason against your exercising without medical supervision?

The StairMaster Submaximal Fit Test

The StairMaster branching protocol is a series of 3-minute stages of continuous exercise at increasing intensity. The first stage is a warm-up at approximately 4 METs. The intensity of the remaining stages is based on the heart rate response to the warm-up. The test is designed to raise the steady

state heart rate of the subject to 110 to 150 beats/min for two consecutive stages. It is important to remember that two consecutive heart rate measurements must be obtained in the 110 to 150 beats/min range to predict VO_{2max}. The test typically lasts from 9 to 15 minutes.

In the StairMaster protocol, each work rate is performed for 3 minutes, with heart rates recorded during the final 4 seconds of the second and third minutes of each stage. If the heart rates are within 5 beats/min, then the heart rate during the last minute is plotted against the work rate, and the program advances to the next 3-minute stage. The program continues for two to four stages until two steady state heart rates between 110 to 150 beats/min are obtained in two consecutive stages. The line generated from the plotted points is then extended to the age-predicted maximal heart rate. A corresponding maximal work rate and VO_{2max} can then be calculated.

At the end of the 3rd minute of each stage, if the heart rates at the end of the 2nd and 3rd minute are not within 5 beats/min of each other, then that work rate is maintained for an additional minute. At the end of the 4th minute, the heart rate is compared to the heart rate at the end of the 3rd minute. If the heart rates are within 5 beats/min, then the heart rate during the 4th minute is plotted against the work rate. If the heart rate at the end of the 3rd and 4th minute are not within 5 beats/min, then the work rate is maintained for one more additional minute. If the heart rate at the end of the 4th and 5th minutes are within 5 beats/min, then the heart rate at the end of the 5th minute is plotted against the work rate. If the heart rate at the end of the 4th and 5th minutes are not within 5 beats/min, then the test failed.

Once two consecutive heart rate measurements are obtained in the 110 to 150 beats/min range, then the test ends successfully and the results are displayed. Estimate maximum aerobic capacity is shown in ml/kg/min and METs. Next, the results are compared to normative values for others of the same age range and gender (see Table 2). Results are stored in the console until the next person starts an exercise program. Press [STATS SCAN] to review the results in addition to being displayed at the end of the test.

Figure 4: StairMaster® Fitness Protocol

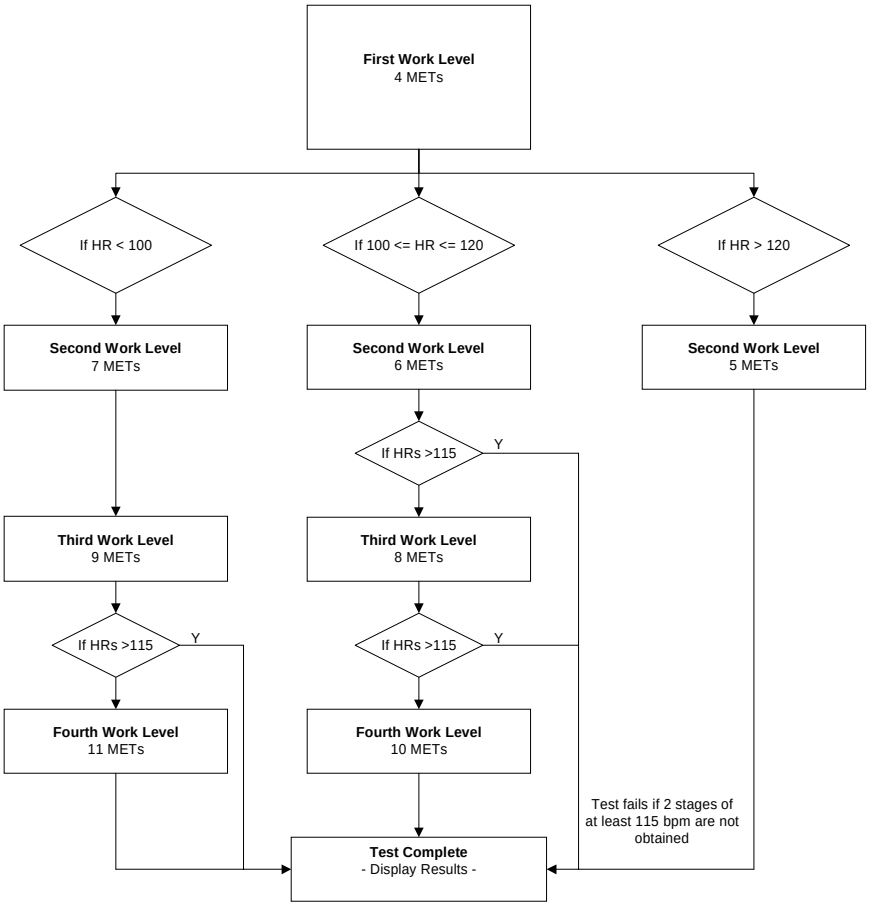

Table 2. Fitness Rating Norms (VO_{2max})

MEN					
Age	**High**	**Good**	**Average**	**Fair**	**Low**
20 – 29	>51	51 – 47	47 – 43	42 – 40	<39
30 – 39	>50	50 – 45	45 – 41	41 – 37	<37
40 – 49	>48	48 – 42	42 – 38	38 – 35	<35
50 – 59	>45	45 – 39	38 – 35	35 – 32	<32
60+	>43	42 – 35	35 – 32	32 – 29	<29
WOMEN					
Age	**High**	**Good**	**Average**	**Fair**	**Low**
20 – 29	>44	44 – 38	38 – 35	35 – 32	<32
30 – 39	>41	41 – 37	37 – 34	34 – 31	<30
40 – 49	>40	39 – 34	34 – 31	31 – 28	<28
50 – 59	>35	35 – 31	31 – 28	28 – 26	<25
60+	>35	35 – 39	29 – 26	26 – 24	<24

The Firefighter's Stair Climb Tests

The StairMaster StepMill is routinely used to assess the aerobic fitness levels of fire fighters in full protective gear carrying heavy equipment. The Candidate's Physical Ability Test (CPAT), approved by the International Association of Fire Fighters (IAFF) and reviewed by the U.S. Justice Department, requires each candidate to step on the StepMill at a predetermined stepping pace for a specific period of time. There are two fire fighter specific Stair Climb Test programs. The first test is the CPAT Stair Climb Test. The second test is a modified version of the CPAT test that is used by the New York City Fire Department (NYCFD).

- CPAT Stair Climb Test – (Fit Test #2) The first phase is a warm-up interval at intensity of 56 steps/min and lasts twenty-seconds. At the end of the first interval the time counter will reset to zero. The second phase continues through nine twenty-second

intervals at intensity of 68 steps/min. The CPAT Stair Climb Test has a total of ten intervals and lasts for three minutes, twenty seconds (including warm-up).

Turning on the CPAT Stair Climb Test

1. Press [∧], [9], [1], [ENTER], on the console keypad. Make sure to press in the middle of each key and be aware that the corresponding numbers will not show in the console display.

2. The console will prompt you to "BEGIN FIT TEST." The test can be stopped at any time by pressing [STOP].

- NYCFD Stair Climb Test – (Fit Test #3) The first phase is a warm-up interval at intensity of 56 steps/min and lasts sixty-seconds, followed by a sixty-second rest period (no stepping). At the end of the rest period the time counter will reset to zero. The second phase is at intensity of 68 steps/min and lasts for five minutes, twelve seconds.

Turning on the NYCFD Stair Climb Test

1. Press [∧], [9], [2], [ENTER], on the console keypad. Make sure to press in the middle of each key and be aware that the corresponding numbers will not show in the console display.

2. The console will prompt you to "BEGIN FIT TEST." The test can be stopped at any time by pressing [STOP].

CONSOLE CODES

There are three groups of console codes which are differentiated according to function. The first group of codes are customization codes and are used to set defaults such as units, language, heart rate input type, etc. The second group of codes are machine status codes and are used to track hours and other general usage patterns for maintenance purposes. The third group of codes are diagnostic codes and are used for troubleshooting. The following key actions are valid in each group of console codes:

- Pressing [LEVEL ∧], [1st #], [ENTER] displays what group of codes is being accessed.
- Pressing [SELECT] or [LEVEL ∧] at that point allows you to view all possible selections. Once in this mode pressing [LEVEL ∨] backs up through the selections; pressing [ENTER] then selects that item. If another test level is available at this point, the [SELECT] / [ENTER] process is repeated.
- Pressing [∧] [1st #, or 2nd #], [ENTER] selects that item directly.
- Pressing [CLEAR] exits any of the special access modes.

Custom Codes

[^] [3] [0]	change workout time limit between 5 to 99 minutes
[^] [3] [1]	change units (MPH or KMH)
[^] [3] [2]	choose type of heart rate input and priority (telemetry or contact)
[^] [3] [3]	- N/A -
[^] [3] [4]	choose console language
[^] [3] [5]	change contrast on console
[^] [3] [6]	- N/A -
[^] [3] [7]	- N/A -
[^] [3] [8]	- N/A -
[^] [3] [9]	reset to factory defaults

1. Change the workout time by pressing [LEVEL: ^], [3 , [0]. The console will display “MAX TIME.” Press [ENTER]. The console will then display the current time limit. Use the keypad to enter the desired time, then press [ENTER]. For no time limit, press [0].

2. Change the units to either Metric or USA units by pressing [LEVEL: ^], [3], [1], [ENTER]. The console will display the current units - either “USA UNITS” or “METRIC UNITS.” Use the [SELECT] key to change option, and then press [ENTER].

3. Choose the desired heart rate input preference by pressing [LEVEL: ^], [3], [2]. The console will then display “HR INPUTS.” Press [ENTER]. The console will then display the current hear rate input selection. Press the [SELECT] key to scroll through the other options. Press [ENTER] after the desired option.

4. Change the language by pressing [LEVEL: ^], [3], [4]. The console will display “LANGUAGE.” Press [ENTER]. The console will then display the current language. Press the [SELECT] key to scroll through the other options. Press [ENTER] to change the option.

5. Adjust the contrast on the LCD screen by pressing [LEVEL: ^], [3], [5]. The console will display “CONTRAST ADJ.” Press [ENTER]. The console will then display the current contrast number. Press the [LEVEL: ^], and [LEVEL: ∨] keys to increase or decrease the contrast. The changed value will remain on exit.

6. Reset the console to factory defaults by pressing [LEVEL: ^], [3], [9]. The console will display “SET DEFAULTS .“ Press [ENTER]. Then console will rest itself and then display “DONE.”

Quick Scan Programming

You can quickly access any of the custom menus by pressing [LEVEL: ^], [3], [ENTER]. The console will then display “CUSTOMIZE.” Scroll through the following options:

[SELECT] “ MAX TIME ”	0
[SELECT] “CHANGE UNITS”	1
[SELECT] “HR INPUTS”	2
[SELECT] “LANGUAGE”	4
[SELECT] “CONTRAST ADJ”	5

[SELECT] "CONTRAST ADJ"	5
[SELECT] "MAX SPEED" **- N/A-**	6
[SELECT] "CLINICAL MODE"-**N/A**-	7
[SELECT] "SET DEFAULTS "	9

Machine Status Codes

[^] [4] [0] display machine run time in hours
[^] [4] [1] display number of workouts
[^] [4] [2] display distance traveled
[^] [4] [3] display software rev
[^] [4] [4] display machine type
[^] [4] [5] **-N/A-**
[^] [4] [6] display machine run time in hours since last cleared (used for maintenance)

1. Display the machine run time by pressing [LEVEL: ^], [4], [0]. The console will display "RUN HOURS XXXXX".

2. Display the number of workouts by pressing [LEVEL: ^], [4], [1]. The console will display "WORKOUTS XXXX."

3. Display the total distance covered up to date by pressing [LEVEL: ^], [4], [2]. The console will then display "DISTANCE XXXX."

4. Display the console software revision number by pressing [LEVEL: ^], [4], [3]. The console will display "CONS 92111-XXX."

5. Display the machine type by pressing [LEVEL: ^], [4], [4]. The console will display "STEPPER (or other machine type)."

6. Display the machine run time since last cleared by pressing [LEVEL: ^], [4], [6]. The console will display "MAINT HOURS XXXX."

Quick Scan Programming

You can quickly access any of the custom menus by pressing [LEVEL: ^], [4], [ENTER]. The console will then display “MACHINE STATUS.” Scroll through the following options:

[SELECT]	“ RUN HOURS XXXX”	0
[SELECT]	“ WORKOUTS XXXX”	1
[SELECT]	“ DISTANCE XXXX”	2
[SELECT]	“ CONS 90211- XXX ”	3
[SELECT]	“ STEPMILL”	4
[SELECT]	**-N/A-**	
[SELECT]	“ MAINT HOURS xxxx”	6

Resetting the Maintenance Hour Counter

For ease of maintenance records, the Stepmill® console has a maintenance timer that will clock the number of hours, workouts, and time between last servicing. After each maintenance period reset the counter.

[^] [7] [1] Reset Service

1. Reset the maintenance hour counter by pressing [LEVEL: ^], [7], [1]. The console will dusplay “RESET SERVICE.” Press [ENTER]. The console will display “DONE.” Press [CLEAR] to return to the starting screen.

Configuration Code

The Stepmill console supports other StairMaster® exercise systems. It is important to verify that the machine configuration code matches the type of machine you have. Speed control problems, along with other problems, can occur if the console is not set up correctly.

[^] [8] [0] Change Machine

1. Change the machine type by pressing [LEVEL: ^], [8], [0]. The console will display “CHANGE MACHINE.” Press [ENTER]. The console will then display the current machine type. Use the [SELECT] key to toggle between options. Press [ENTER] for the desired option.

HELPFUL HINTS

Read all maintenance instructions thoroughly before beginning work. In some cases, an assistant is required to perform the necessary tasks. The safety level given by the design of this equipment can only be maintained when the equipment is regularly examined for damage and wear. Inoperable components shall be replaced immediately or the equipment shall be put out of use until it is repaired. All references to the right or left side and to the front or back are made as if you were on the machine ready to exercise.

TOOL LIST

The following tools are needed to perform service and maintenance:

- Standard screwdriver
- Combination wrenches (sizes 7/16 - 3/4")
- Combination pliers
- Shop goggles or other eye protection
- Allen wrench set (sizes 5/64 - 1/4")
- Socket set or nut driver set (sizes 1/4 - 3/4" in 1/16" increments)
- Phillips screwdriver
- Adjustable wrench
- External snap ring pliers
- Wire stripper/crimper tool
- Volt-ohm meter (multimeter)
- Locking pliers

MAINTENANCE RECORDS

For ease of maintenance the 4400/4600 PT/CL console will keep track of hours, number of workouts, time between last servicing, etc. You can quickly access any of the custom menus by pressing [LEVEL: ^], [4], [ENTER]. The console will then display “MACHINE STATUS”. Scroll through the following options:

[SELECT]	“ RUN HOURS XXXX”*	0
[SELECT]	“ WORKOUTS XXXX”	1
[SELECT]	“ DISTANCE XXXX”	2
[SELECT]	“ CONS 90211- XXX ”	3
[SELECT]	“ STEPMILL”	4
[SELECT]	**-N/A-**	
[SELECT]	“ MAINT HOURS xxxx”	6

*The machine may show a few hours of use due to testing at the manufacturing facility.

MAINTENANCE INSTRUCTIONS

INITIAL SERVICE

Upon receiving your machine, use a soft, clean towel to wipe off the dust which may have accumulated during shipping. Your new machine will require minor assembly. Refer to the “Installation Instructions” section of this Manual for details.

PREVENTIVE MAINTENANCE

The procedures for performing the recommended preventive maintenance are summarized in Table 3. The schedule is based on normal usage in a commercial health club environment; adjust the schedule to meet actual machine usage. Refer to the “Parts Removal and Replacement” section of this Manual for all disassembly and assembly instructions.

WARNING

TO AVOID INJURY DUE TO SLIPPERY PEDAL SURFACES, DO NOT USE PETROLEUM-BASED CLEANERS OR ARMORALL-TYPE PROTECTANTS ANYWHERE ON THIS MACHINE OR THE FLOOR MATS.

Cleaning and Inspecting

1. DO NOT USE GLASS CLEANERS OR ANY OTHER HOUSEHOLD CLEANER ON THE CONSOLE. Clean the console daily with a water-dampened cloth and wipe dry after cleaning.

2. Clean the exterior of your Stepmill® 7000 PT exercise system daily with soap and water.

3. Thoroughly clean the entire machine at least once a week.

4. Inspect the painted surfaces of the exposed frame for any rust, bubbling or chips during the weekly cleaning. The salt in perspiration can damage the unpainted surfaces. Repair the damaged area with a rust-inhibitor paint. Contact our Customer Service Department at 800-331-3578 to order a touch-up paint kit.

5. Clean the step hinges carefully. Perspiration tends to accumulate in the hinges, and this can lead to eventual corrosion.

6. Inspect the Poly-V belt for excessive wear during the weekly cleaning. Adjust the belt tension if necessary.

Lubrication

The StairMaster® Stepmill® 7000 PT exercise system has six components that require periodic lubrication: the drive chain, the two step chains, the two bearing plates and the step hinges. These parts are shown in the figure below. You will need to remove the side covers to lubricate the chains and the bearing plates.

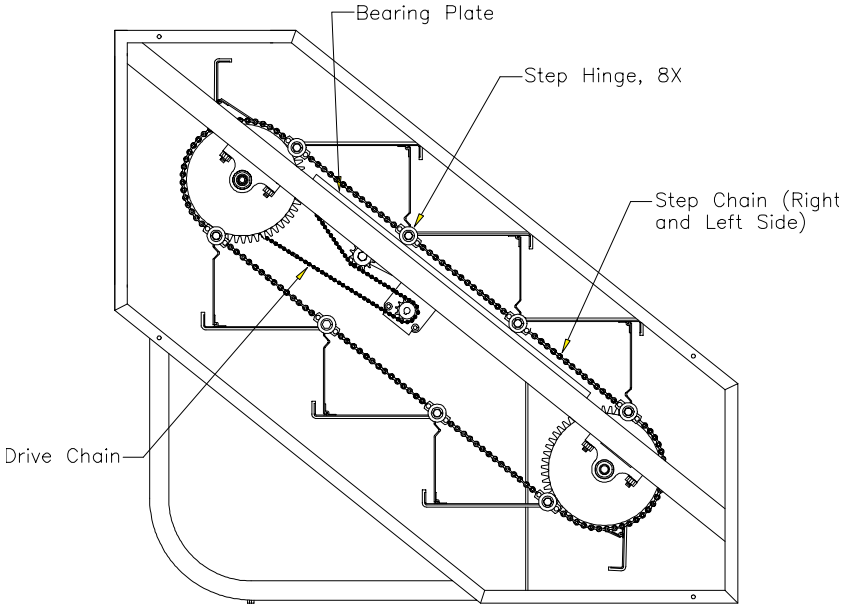

1. Place a protective mat on the floor while you are lubricating your machine. A rubber floor mat is available from StairMaster Health & Fitness Products, Inc.

2. Lubricate the chains monthly with 30W motor oil. Drip the oil onto the chain plates and rollers. Let the oil soak in for a few minutes and then remove any excess oil with a dry rag.

3. Remove the chains every three months to thoroughly clean and lubricate them. Use a mild degreaser and a stiff brush to remove dirt and corrosion from the chain. Read the instructions on the degreaser container before using.

4. Clean each bearing plate and lubricate it with multipurpose grease every three months. The plate is lubricated to reduce friction when the step shaft bearings roll over the plate.

5. Once per month, use 30W motor oil or brush light bearing grease into the step hinges to lubricate the hinges and to prevent corrosion. Wipe off all excess lubricant.

WARNING

TO REDUCE THE POSSIBILITY OF SLIPPING, BE SURE THE STEP AREA IS FREE OF GREASE OR OIL. WIPE ANY EXCESS OIL OFF THE MACHINE SURFACES.

Table 3. Recommended Preventive Maintenance Schedule

PART	RECOMENDED ACTION	FREQUENCY	CLEANER	LUBRICANT
Exterior Surfaces	Clean	Daily	Soap & water	N/A
Console	Wipe Clean	Daily	Water	N/A
Poly-V Belt	Inspect and adjust if necessary	Weekly or after 70 hours of use	N/A	N/A
Step Chain Assembly	Lubricate	Monthly or after 300 hours of use	N/A	30W motor oil
	Clean and lubricate	Quarterly or after 900 hours of use	Mild degreaser	30W motor oil
Drive Chain	Lubricate	Weekly or after 70 hours of use	N/A	30W motor oil
	Clean and lubricate	Quarterly or after 900 hours of use	Mild degreaser	30W motor oil
Step Hinges	Lubricate	Monthly or after 300 hours of use	N/A	30W motor oil
Bearing Plate	Clean and lubricate	Quarterly or after 900 hours of use	Clean, dry rag	Multipurpose grease

*__Note__: Use of lubricants other than those so specified will result in diminished performance and a shorter life span for that part.

TROUBLESHOOTING

GENERAL TROUBLESHOOTING GUIDELINES

This section outlines several tests to systematically identify and isolate the cause of problems in the electrical system and the drive train. This troubleshooting section is organized into four basic problem sections: Electrical System, Console Diagnostics, Speed Control, and the Drive Train. The first step is to identify the problem. Once you have identified the problem, perform all the tests in exactly the same order as written. Refer to the “Parts Removal and Replacement” section of this Manual for all disassembly and assembly instructions. To order a replacement part, or to get help with the troubleshooting process, contact our Customer Service Department at 800-331-3578. International customers should contact their local distributor or call 425-823-1825.

TROUBLESHOOTING THE ELECTRICAL SYSTEM

The electrical system consists of: the power supply, main cable, relay board, load resistor, and the console. In order to identify the component that is causing the problem, you must systematically test the system. You will need a volt-ohm meter (multimeter) to conduct portions of the following procedures. The console and power supply are not serviceable by the owner. If either of these parts are inoperable, they must be replaced. Opening the console or the power supply will void the warranty.

The Console Fails to Power Up

A. Perform a visual check of the machine. Check the following things first:

   1. Is the power supply plugged in?

   2. Is the indicator light lit on the power supply? If it is, proceed to step #3. If the light is not on, go to step B.

   3. Replace or exchange your console with a console you know is good and retest the machine.

B. Verify AC power.

   1. Disconnect the AC power cord from the AC wall outlet.

2. Verify that the AC wall outlet is supplying the correct power in one of two ways: a) Use a voltmeter to verify that the AC line voltage is between 108 and 130 VAC (or between 208 and 240 VAC, if applicable) at the AC wall outlet; or b) Plug in an alternate AC-powered device (a lamp, for example). If the AC wall outlet is supplying the correct power, proceed to step #3. If the voltage is outside the range or if the device does not work when plugged into the AC wall outlet, consult an electrician for further assistance and then retest the AC wall outlet.

3. Plug the AC power cord into the wall outlet and proceed to the next section.

C. Verify DC power.

1. Make sure that the AC power cord is plugged in and that the AC wall outlet is delivering the proper voltage.

2. The indicator light should be lit. If it is, proceed to step #3. If the indicator light is still not lit, replace the power supply and test the new power supply.

3. Disconnect the cable from the DC power connector located on the bottom cover. Use a DC voltmeter to verify 12-19 VDC at the end of the DC cable. Pin #1 is negative and pin #2 is positive. Proceed to step #4 if the VDC is within the range. Replace the power supply if the VDC is outside the range and test the new power supply.

4. Remove the right side cover. Reconnect the DC power cable to the machine. Locate the relay/resistor circuit board located just inside the frame, midway between the top and bottom steps (refer to Wiring Diagram 1). There are three red indicator lights along the bottom edge of the relay assembly circuit board. They are labeled, from top to bottom: Field, Power, and Relay. Ensure the black and white wire power connector (labeled J2 on the relay resistor circuit board) is securely connected to the relay resistor circuit board.

   a. The Power light should be lit. If it is, go to step #5. If it is not, disconnect the power connector from the J2 position on the relay

assembly circuit board (refer to Wiring Diagram 2). Use a DC voltmeter to measure the VDC at the power connector. Pin #1 is negative and Pin#10 is positive. The reading should be between 12 and 19 VDC. If you are not getting power to the connector, replace the power connector assembly and retest.

b. If you are getting the correct voltage at the power connector, reconnect it to the J2 position on the relay assembly circuit board. Disconnect the main cable connector at the J1 position of the relay assembly circuit board. Check the VDC reading at the silver tabs on the relay assembly circuit board. Tab #4 (labelled +/WHT) is positive and tab #5 (labelled GND/BLK) is negative (refer to Wiring Diagram 2). You should get a reading between 12 and 19 VDC. If your reading is not within the range, replace the relay assembly circuit board and retest.

c. If you are getting the correct voltage at tabs #4 and #5, check the VDC reading at the connector labeled position J1 on the relay assembly circuit board. Pin #4 is positive and pin #5 is negative. You should get a reading between 12 and 19 VDC. If your reading is not within the range, replace the relay assembly circuit board and retest.

d. If all of the above power tests produce VDC readings that are within range and the Power indicator light is still not lit, the Power indicator light is probably inoperable. Replace the relay assembly circuit board, reconnect all wires, and retest.

5. Remove the console and disconnect the console cable. Use a DC voltmeter to measure the VDC at pin #1 (negative) and pin #10 (positive) of the console cable connector. You should get a reading between 12 and 19 VDC. If the reading is not within the range, replace the cable assembly and retest.

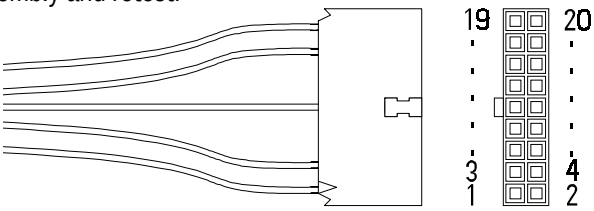

The following tests are performed while the console is in the “SELECT WORKOUT” mode. If the console fails any test, the console should be replaced or exchanged. To return to the “SELECT WORKOUT” mode, press either [CLEAR] or [START/STOP] while in the DIAGNOSTIC mode. Please note that there may be addition verbiage on the display other than is listed in this manual. The Stepmill® 7000 PT console is used on other StairMaster® equipment.

Diagnostic Codes

[^] [6] [0] Test display
[^] [6] [1] Test keyboard
[^] [6] [2] Test serial port
[^] [6] [3] Test alternator
[^] [6] [4] **-N/A-**
[^] [6] [5] **-N/A-**
[^] [6] [6] Test Tach
[^] [6] [7] **-** [6] [9] **-N/A-**

The Display Test

During the display test, the console screen alternates between all LCD segments turned on, and sample program profile screen at a 2-second rate.

1. Press [LEVEL: ^], [6], [0], [ENTER]. The console will display “DISPLAY TEST”.

2. All LCD segments will turn on for 2 seconds and then a sample program profile will be displayed for 2 seconds. Press [CLEAR] to end the test.

The Keypad Test

Perform this test if you are having trouble entering data into the console. During the test, pressing any key displays that key name on the message line. Press [CLEAR] to exit.

1. Press [LEVEL: ^], [6], [1], [ENTER] to start the test.

2. Firmly press each button except [CLEAR]. The name of the key will be shown in the display window. Press [CLEAR] to end the test.

The Serial Port Test

This test verifies that the RS 232 port used for linking to commercial entertainment systems is working. You must have the loop-back cable assembly, pn 040051-001 to perform this test.

1. Insert the loop-back cable assembly into the RS 232 port on the back of the console.

2. Press [LEVEL: ^], [6], [2], [ENTER], to start the test.

3. The console will run a diagnostic test and then display either “PASS” or “FAIL”. Replace the console if it fails this test.

The Alternator Test

Use this test to verify the alternator field routines of the console. You will need to briefly exercise on the machine for this test.

1. Press [LEVEL: ^], [6], [3], [ENTER], to start the test.

2. For “Field on” press [LEVEL: ^]. Step on the machine for approximately 10 to 15 seconds. If full resistance is achieved during this time, your console has correct current flow. If no resistance is achieved, either the console or the alternator is bad. See the electrical troubleshooting portion of this manual to isolate and test the alternator. Replace the console if the alternator is good.

3. For ‘Field off” press [LEVEL: V]. Step on the machine for approximately 10 to 15 seconds. You should not get resistance with the field turned off. Press [CLEAR] to end the test.

The Tach Test

If you do not have resistance, perform the tach test. The tach test will tell you the tach signal, in revolutions per minute (RPMs), picked up by the console.

1. Press [LEVEL: ^], [6], [6], [ENTER]. The console will display "TAR TACH ACT". The target tach speed of 2000 RPMs will be shown in the upper left corner of the display window. The actual tach picked up by the console will be shown in the upper right corner of the display window.

2. Start stepping on the steps. The number in the right hand corner of the console should increase to 2000 RPMs (+/- 200). If the tach signal picked up by the console is less then 1900 RPMs then there is a problem in the AC tach circuit - either with the console software, alternator (check the AC tach wire, the field wire, the diode, and the terminal posts), or the main cable.

Error Reporting

The console will display various error messages in the display window. The total amount of errors will be displayed in the upper right numeric window. Note that only the highest priority reported error will be displayed. Errors are handled in two ways. One as a non-fatal "WARNING" which will display the text message but continue system operation until the user presses the [CLEAR] key. The second way is as a fatal "ERROR" which will stop the exercise and return the system to an idle intensity state. The console will display the error text and not let the user restart the programs unless power has been turned off and then back on.

The following microprocessor errors require a console replacement; ALU ERROR, TIMER ERROR, and STATIC RAM ERROR.

Resetting the power may clear the following microprocessor errors; EEPROM ERROR, and PROGRAM ERROR. If resetting the power doesn't work, the console may need to be replaced.

CONSOLE DIAGNOSTIC TESTS

The Telemetry (Polar®) Heart Rate Test

The telemetry heart rate system is made up of the console, the heart rate receiver, and the chest strap (available separately). You can test each component by performing the following steps:

1. You will need to put a chest strap on in order to test the telemetry heart rate. Before you put on the chest strap, wet the two contact patches. Secure the chest strap as high under your pectoral muscles (chest) as is comfortable. The chest strap should fit snugly, comfortably, and allow normal breathing.

2. A flashing ♥ should be displayed on the console. Your heart rate, in beats per minute, will show next to the heart icon. If the heart icon does not show, or if your heart rate is not displayed on the console then you have a problem with either the console, chest strap, or heart rate receiver.

3. Verify that the console software has been set up to receive telemetry (see the heart rate monitoring section of this manual). Note that holding the contact heart rate sensors (if enabled) can inhibit the telemetry heart rate input from working.

4. Test your chest strap with a machine that you know is working, or with a heart rate watch that you know is working.

5. If possible, replace or exchange your console with a machine that you know is working and retest the machine.

6. Excess false heart rate detection: the telemetry receiver located in the console is susceptible to mechanical vibration as well as external electrical interference. Hitting the console or the frame may momentarily cause errant heart beat detection - this is normal. If excessive false heart beats appear only during workouts, check that the console cable is not curled up behind the console. Pull as much of the cable down and away from the console as possible. False heart beats while the machine is idle are most likely due to external interference. Try plugging the machine into a different outlet, or moving it to a new location.

If you have problems with erratic speed control while operating the machine, the cause may be either electrical or mechanical in nature. You will have to remove the side covers to conduct most of these tests.

A. Perform a visual check of the machine. Check the following things first:

1. Inspect the Poly- V belt for proper tension and excessive wear. A loose belt will cause excessive noise and wear. The machine will run sluggishly if the belt is too tight.

2. Replace a worn or frayed Poly-V belt. Adjust the belt so that there is 1/10" (0.3 cm) deflection at a point midway between the alternator and transmission pulleys with fingertip pressure (See Drawing Below).

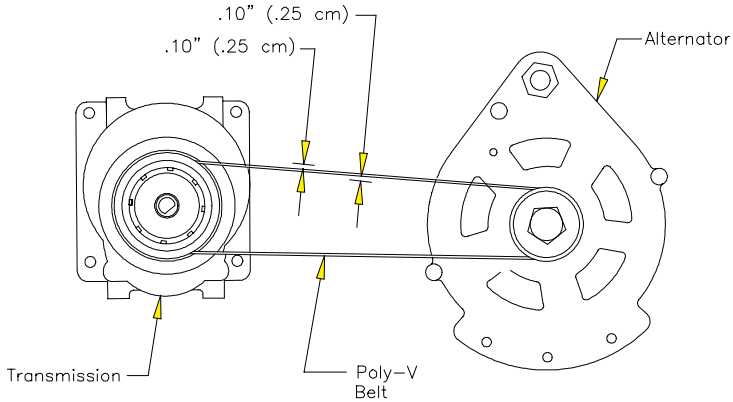

3. Check for proper wire connections on the alternator, relay assembly circuit board, and load resistor (See Drawing Below).

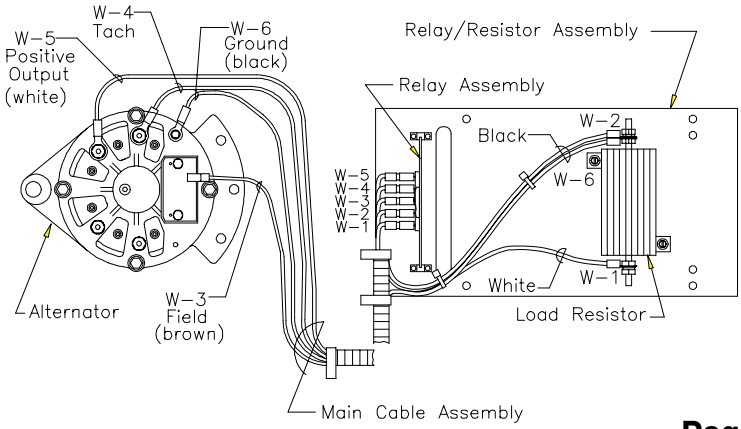

4. Replace or exchange the console with another console you know is good and retest the machine.

B. Check the relay assembly circuit board while the console displays "SELECT WORKOUT." You will need an assistant to complete the test of the relay assembly circuit board.

1. Remove the right side cover. Locate the relay assembly circuit board located just inside the frame, midway between the top and bottom steps (refer to Wiring Diagram). There are three red indicator lights along the bottom edge of the circuit board. They are labeled, from top to bottom: Field, Power, and Relay. Ensure the black and white wire power connector (labeled J2 on the relay assembly circuit board) is securely connected to the relay assembly circuit board (refer to Figure Below).

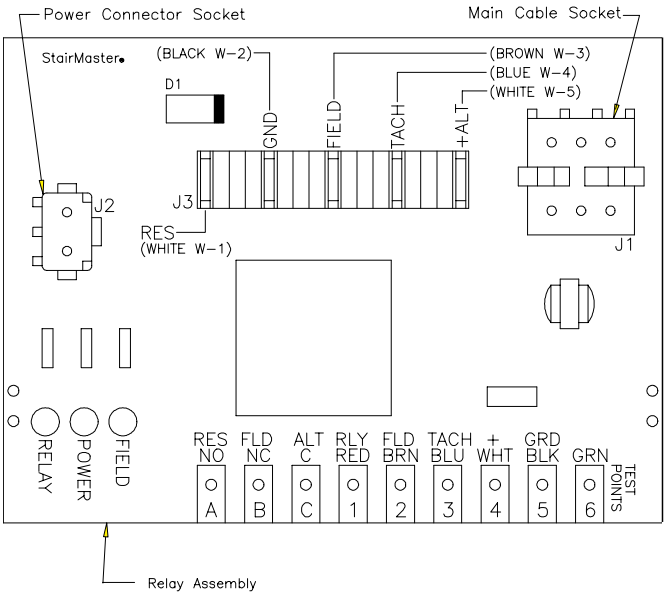

2. If the Power light is lit, go to step #3. If it is not, perform the tests as described in step 4b - c of the “Console Fails to Power Up” section.

3. The relay indicator light should be lit. If it is lit, proceed to step #5. If it is not, use a jumper wire on the relay assembly circuit board. Jump the silver tabs #1 (labeled RLY/RED) and #5 (labeled GRD/BLK) (refer

to Figure on page. 34). The relay indicator should light up. If it does, go to step #4. If the relay indicator does not light up, the relay assembly circuit board must be replaced. Replace the relay assembly circuit board and retest the machine.

4. You must check the cable assembly for continuity if the relay indicator lit up when you jumped tabs #1 and #5.

   a. Unplug the main cable from the position labeled J1 on the relay assembly circuit board. Disconnect the console cable from the back of the console. Set your multimeter to the continuity check mode; on most meters, this will be the resistance or ohms setting.

   b. Place one lead of the multimeter on pin #1 at the console connector end of the console cable (refer to Wiring Diagram). Place the other lead on pin #1 at the end of the main cable you disconnected from the relay assembly circuit board. You will get a reading of near zero ohms if there is continuity in the cable assembly.

   c. Check continuity in both ends of the main cable assembly at pin #5.

   d. If there is no continuity in the cable assembly at either pin, replace the cable assembly and retest. If there is continuity in the cable assembly at both pins and the relay resistor indicator is not lit, the console is inoperable and must be replaced.

5. Have your assistant step on the staircase (leave the console in the ATTRACT mode) while you check the field indicator light. It should be flickering. If it is and you still have a speed control problem, go to step #6.

   If it is not flickering, ensure the following: the console cable is connected to the console; the console/main cable connection is secure; the connector at position J1 on the relay assembly circuit board is securely connected; that there is continuity in the cable assembly. To check for continuity:

a. Unplug the connector at position J1 on the relay assembly circuit board. Disconnect the console cable from the back of the console. Set your multimeter to the continuity check mode; on most meters this will be the resistance or ohms setting.

b. Place one lead of the multimeter on pin #2 at the console connector end of the console cable. Place the other lead on pin #2 at the end of the main cable you disconnected from the relay assembly circuit board. You will get a reading of near zero ohms if there is continuity in the cable assembly.

c. If there is no continuity in the cable assembly, replace it and retest. If there is continuity in the cable assembly and the field indicator light is still not flickering, contact the Customer Service Department at 800-331-3578 for further assistance.

6. If the field indicator was flickering while your assistant was on the machine and you still have a problem with speed control, you need to test the alternator.

a. Disconnect the white wire (labeled positive output on the alternator) and the brown wire (labeled “Field” on the alternator). Use a jumper wire to jump the Field and positive output terminals of the alternator.

b. Have your assistant step onto the staircase. Does the staircase slow down? If it does not, you need to replace the alternator. If the staircase does slow down, contact the Customer Service Department for further assistance.

c. Replace or exchange the alternator with another alternator you know is good and retest the machine.

d. Test the load resistor as outlined in the "Load Resistor Test" section of this Manual. If the speed control problem still exists, contact the Customer Service Department at (800) 331-3578 for further assistance.

The alternators are heavy-duty models designed to withstand the rigors of commercial use. One possible reason for repeated failure is an inoperable load resistor. To test the load resistor:

1. Unplug the AC power cord from the AC wall outlet.

2. Locate the load resistor mounted to the relay board assembly just under the staircase.

3. Disconnect one black wire from the resistor (See Drawing Below).

4. Set your multimeter for R x 1 or the lowest available resistance range. If you have an analog multimeter, touch the two leads together and adjust the meter for a zero reading.

5. Place one lead on Tab A and one lead on Tab 5 of the relay assembly circuit board (See Drawing Below). You should get a reading of approximately 1.0 ohm or less.

6. Replace the load resistor if the reading is out of range and retest the new load resistor.

7. Reconnect the AC power cord and reinstall the right side cover.

8. If the problem still exists, contact the Customer Service Department at (800) 331-3578 for further assistance.

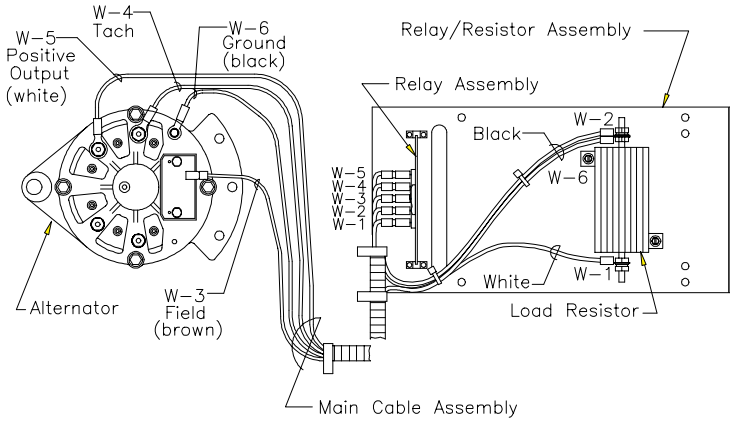

TROUBLESHOOTING THE DRIVE TRAIN

If you hear a grinding or clicking noise, or experience excessive vibration during exercise, or if the steps are not functioning properly, you probably have a problem in the drive train. Attempt to isolate the problem area by performing the following tests in precisely the order listed below. Refer to the “Parts Removal and Replacement” Section of this Manual for all disassembly and assembly instructions.

1. Unplug the power supply from the AC wall outlet and remove the side covers.

WARNING

TO REDUCE THE RISK OF INJURY, DO NOT OPERATE THE MACHINE WHILE THE SIDE COVERS ARE REMOVED. DO NOT ROTATE THE STAIRS WHILE ANYONE'S HANDS ARE INSIDE THE MACHINE.

2. Check the condition and the tension level of the Poly-V belt. Replace the belt if it is excessively worn.

   a. Adjust the tension level so that you can deflect either side of the belt 1/10" (0.3 cm) at the center between the alternator and the transmis sion pulleys (See Drawing Below). Noise can be generated by a belt that is too tight or too loose.

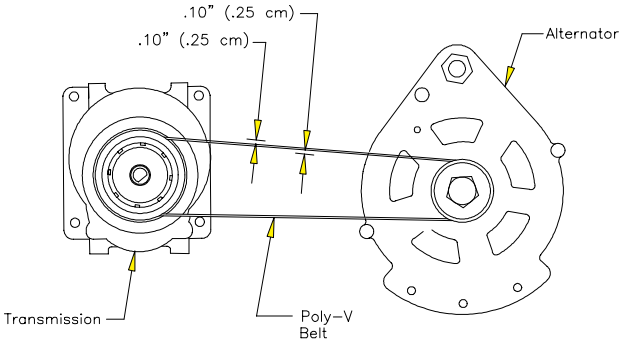

   b. If the noise is still present, remove the Poly-V belt and rotate the staircase without standing on it. With the Poly-V belt removed, the staircase will rotate very quickly.

   c. If the noise no longer exists, replace the alternator.

3. Check the condition of the alternator.

   a. Unplug the alternator from the relay board and remove the Poly-V belt.

   b. Spin the alternator pulley with your fingers. It should spin freely and remain spinning for at least one and one-half revolutions. If it does not spin as it should, the bearings may be bad and the alternator should be replaced.

   c. If the pulley does spin freely, check the alternator for noise, roughness, or the presence of black powder inside the alternator or near the outside of the case. If any of these conditions exist, the brushes may be bad and the alternator should be replaced.

   d. Reconnect the Poly-V belt and adjust the belt tension.

4. Check the drive chain mechanism. Rotate the stairs and look for chain links that do not flex as the chain travels over the sprockets. If the links are frozen or sticking, replace the chain.

5. Check the transmission.

   a. Rotate the steps by hand and listen for the noise.

   b. If you hear the noise, remove the drive chain and the Poly-V belt. Rotate the steps by hand again and listen for the noise. If the noise has gone away, replace the transmission.

6. Check the step chain assemblies.

   a. Have your assistant slowly exercise on the machine. Observe the staircase. If the staircase moves to the left or right during exercise, ensure the set screws in the bearing adjusters are tight.

   b. Rotate the stairs and look for chain links that do not flex as the chain travels over the sprockets. If the links are frozen or sticking, replace the chain.

7. Check the condition of the upper and lower sprocket assemblies. Replace the sprocket assembly if it is worn excessively, has broken teeth, or if it is bent.

8. Check the alignment of the upper and the lower sprocket assemblies. The outside face of the upper and lower sprockets should be 1-11/16" (4.3 cm) from the outside edge of the left frame rail. Loosen the nuts on the pillow block bearing collars and tighten or loosen the bearing adjuster set screws until the distance to both sprockets is correct. Tighten the pillow block bearing nuts and verify the distance.

9. Check the step assembly.

   a. Rotate the steps and check the hinges, step shafts, washers, and bearings (See Figure to Right) for wear, corrosion and lack of lubrication. Replace any worn parts.

   b. Ensure the nuts at each step shaft end are tight.

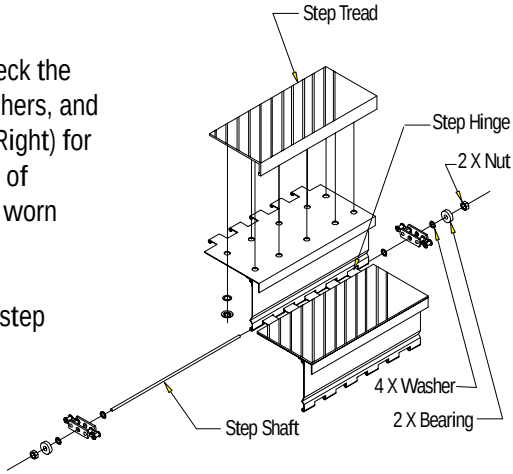

10. Reinstall all parts. If the problem still exists, contact the Customer Service Department at 800-331-3578 for further assistance.

COVERS

WARNING

TO REDUCE THE RISK OF INJURY, DO NOT OPERATE THE MACHINE WHILE THE SIDE COVERS ARE REMOVED. DO NOT ROTATE THE STAIRS WHILE ANYONE'S HANDS ARE INSIDE THE MACHINE.

There are five covers on the machine: two side covers, a back cover, a bottom cover, and a top cover. The side covers overlap the top cover. The side covers must be removed before the top cover and/or the bottom cover can be removed.

All covers are held in place with reusable plastic fasteners (refer to Figure 5 for their location). To remove the fasteners, slide either end of the fastener removal tool under the edge of the pin head (refer to Figure 6). The pin should not be removed. Pull the cover away from the frame. Do NOT use the fastener removal tool or any other sharp tool to pry out the fastener base because you may damage the covers - use the fastener removal tool to remove the pin.

To reinstall the fastener, insert the base of the fastener through the cover and into the frame. When the base is in place, push the pin in all the way to secure the fastener.

Side Covers

1. Remove the 14 fasteners on each side cover.

2. Pull the cover away from the frame.

Top Cover

1. Remove both side covers.

2. Lift the top cover away from the frame.

3. Set the top cover in place. Secure the side covers to complete reinstallation.

Back Cover

1. Remove the 8 fasteners and lift the back cover away from the frame.

2. Align the holes in the frame and the back cover. Secure the back cover with the 8 fasteners.

Bottom Cover

1. Remove both side covers to gain access to the bottom cover fasteners.

2. Disconnect the DC power cable.

3. Remove the six fasteners and remove the bottom cover from the frame.

4. Reinstall the bottom cover, then the two side covers. Remember to connect the DC power cable.

CONSOLE

1. Locate the mounting knobs on the back of the console (See cutaway view Below).

2. Loosen and remove the four mounting knobs and lock washers.

3. Lift up the console and unplug the console cable from the back of the console.

4. Remove the console from the frame.

5. Reinstall the console by reversing the steps.

POLY-V BELT

WARNING

THE POLY-V BELT MUST BE ADJUSTED SO THAT THE CENTER OF EITHER SIDE CAN BE DEFLECTED 1/10" (0.3 CM) FROM ITS CENTER LINE WITH FINGER-TIP PRESSURE. A TIGHT BELT WILL CAUSE SLOW AND SLUGGISH OPERATION; A LOOSE BELT WILL CAUSE EXCESSIVE NOISE AND BELT WEAR.

1. Remove the left side cover.

2. Loosen the adjustment bolt that mounts the alternator to the slotted alternator brace then loosen the pivot nut.

3. Pivot the alternator forward to loosen the belt. Remove the Poly-V belt.

4. When reinstalling the Poly-V belt, pivot the alternator forward or back as necessary to allow 1/10" (0.3 cm) of play on either side of the belt (See Figure Below).

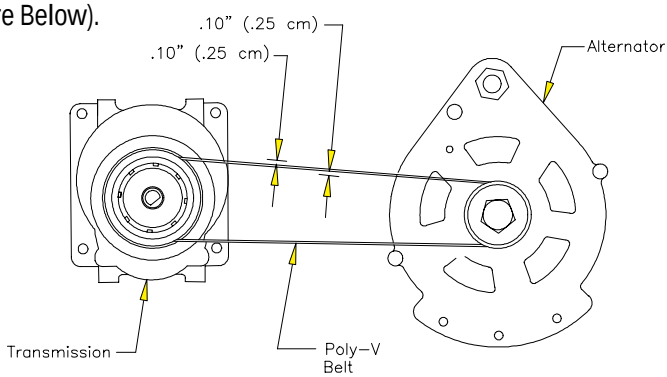

5. Tighten the adjustment bolt and verify the Poly-V belt tension.

DRIVE CHAIN

1. Remove the left side cover.

2. Remove the retaining clip and retaining plate from the drive chain master link. Do not remove the master link from the drive chain yet.

3. Push up on the idler arm with one hand to relieve the tension on the drive chain (See Drawing Below). Remove the master link from one end of the drive chain and remove the drive chain from the sprockets.

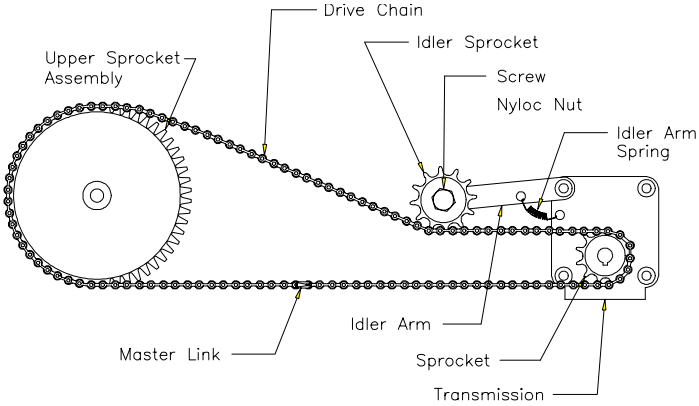

4. Install the new drive chain by reversing the steps.

STEP ASSEMBLY

1. Remove the right and the left side covers.

2. Rotate the stairs until the step you want to remove is positioned in the middle of the staircase.

3. Loosen and remove the nut from one end of the step shaft on both the upper and the lower hinges of that step (See Figure to Right).

4. Remove the bearing and the washer from each step shaft.

5. Grasp the opposite step retaining nut with pliers or locking pliers. Pull the step shaft out of the upper and lower step hinges.

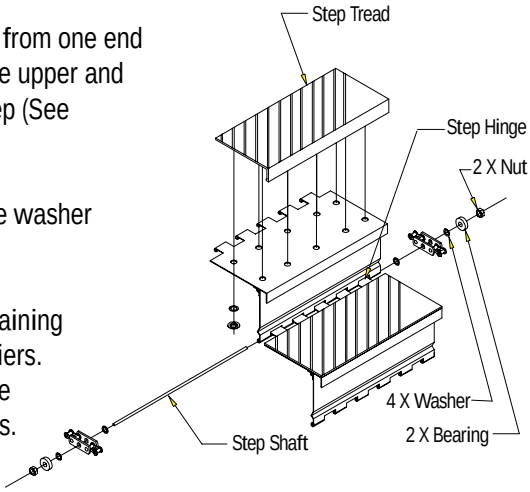

Be careful to not lose the washer located between the step and the modified link.

***Note**: Each step assembly weighs approximately 15 lbs. Be aware of finger placement when removing the step assembly.*

6. Reinstall the step by reversing the procedures.

STEP CHAIN ASSEMBLY

1. Remove the right and the left side covers.

2. Rotate the stairs to position the step chain master link on the lower span of the chain. It may be necessary to reduce the chain tension to remove the master link. Perform the following steps to reduce the chain tension:

   - Count and write down the number of exposed threads on the top bearing adjuster set screw for a reference when you reassemble the parts (SeeFigure Below).

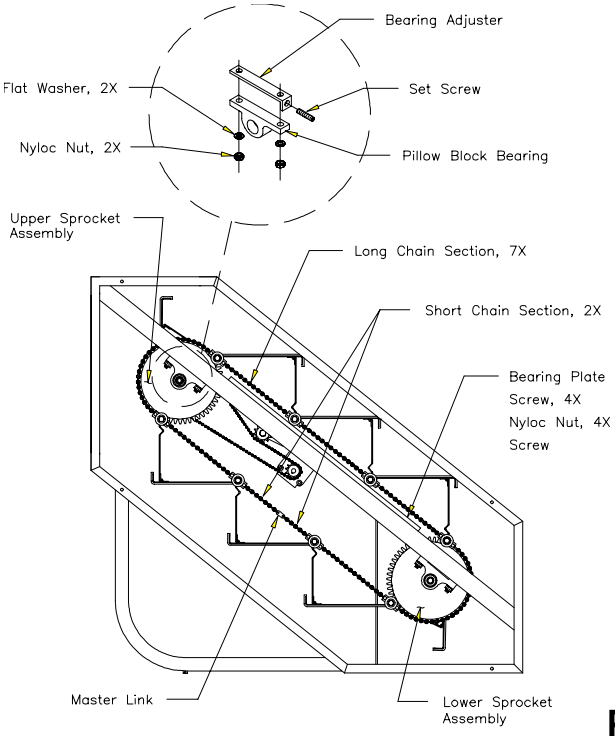

- Loosen the nuts on the pillow block bearing housing.
- Loosen the bearing adjustment set screw until the chain tension level is relieved to a point where the master link may be disconnected.

3. Remove the master link.
4. Using the old master link, connect the new chain assembly to the lower half of the old chain assembly.
5. Remove the nut from the step shaft above the master link. It may be necessary to place another 5/16"-18 nut on the opposite end of the step shaft to gain leverage and remove the nut.
6. Remove the bearing, the outer step shaft washer and the modified link of the old step chain assembly from the step shaft.
7. Place the modified link of the new step chain assembly on the step shaft. Reinstall the outer step shaft washer, bearing and nut.
8. Rotate the steps until the next step shaft is in approximately the same place as the previous step shaft.
9. Repeat steps 6-8 until the new chain assembly is installed on the remaining step shafts.
10. Remove the master link connecting the old chain with the new chain.
11. Connect the new chain assembly together with the master link. Tighten the bearing adjustment set screw until the same number of threads as in step 2 are exposed. Tighten the nuts on the pillow block bearing housing.
12. You should consider replacing the opposite step chain so that both chains will wear equally.
13. Reassemble the machine in reverse order.

UPPER (AND LOWER) SPROCKET ASSEMBLY

1. Remove the right and left side covers.

2. Remove all of the steps.

3. Remove the drive chain if you are removing the upper sprocket assembly.

4. Count and write down the number of exposed threads on the bearing adjuster set screws on both sides of the machine for a reference when you reassemble the parts (See Drawing Below).

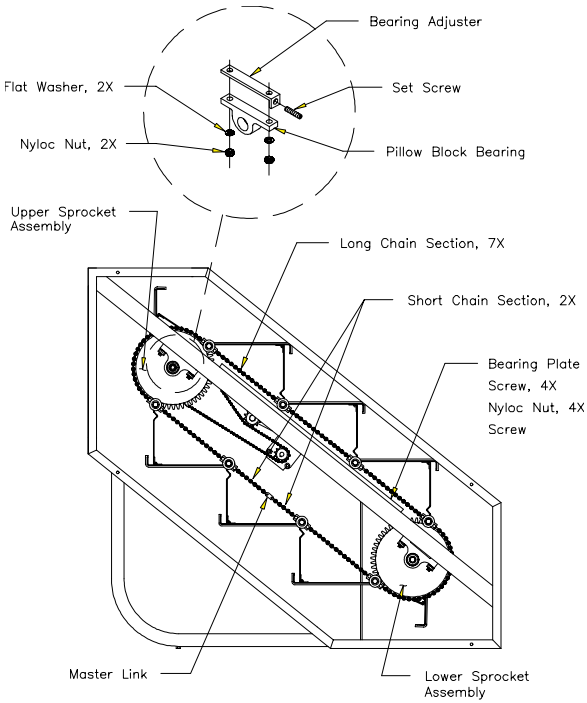

5. Remove the right and left step chain assemblies.

6. Loosen the adjustment screws until the tips of the screws are flush with the inside face of the bearing adjusters.

7. Have an assistant support the sprocket assembly. Loosen and remove the nuts on the pillow block bearing housing.

8. Remove the sprocket assembly from the frame.

9. Loosen the two set screws on both of the pillow block bearing collars and remove the pillow block bearings from the sprocket axle.

10. To reinstall the sprocket assembly:

    - Slide the pillow block bearings on both ends of the sprocket axle. Do not tighten the set screw on the pillow block bearing collars yet.

    - Place the bearing adjusters and the sprocket assembly onto the frame and start the pillow block bearing housing nuts onto the frame.

    - Slide the sprocket assembly toward the front of the machine while tightening the pillow block bearing housing nuts.

    - Align the sprocket assembly. The outside face of the left sprocket should be 1-11/16" (4.3 cm) from the outside edge of the left frame rail. Move the sprocket axle within the pillow block bearing collar as needed to get the correct distance.

    - When the distance is correct, tighten the pillow block bearing collar set screw on the left and right sides of the machine.

    - Loosen the pillow block bearing housing nuts slightly. Tighten the bearing adjuster set screws until the exact number of threads are exposed (refer to your notes taken earlier). Tighten the pillow block bearing housing nuts.

    - Check the alignment of the other sprocket at this time. If the distance from the outside edge of the left frame rail to the outside face of the sprocket is not 1-11/16" (4.3 cm), loosen the set screws on the left and right side pillow block bearing collars and adjust the axle. Tighten the pillow block bearing collar set screws on the machine and then go to step 11.

11. Complete the reassembly of the machine by performing steps 1- 4 in reverse order.

CABLE ASSEMBLY

1. Remove the right side cover.

2. Remove the console and unplug the console cable from the back of the console (See Drawing Below). Unplug the plastic connectors at the console cable/main cable junction.

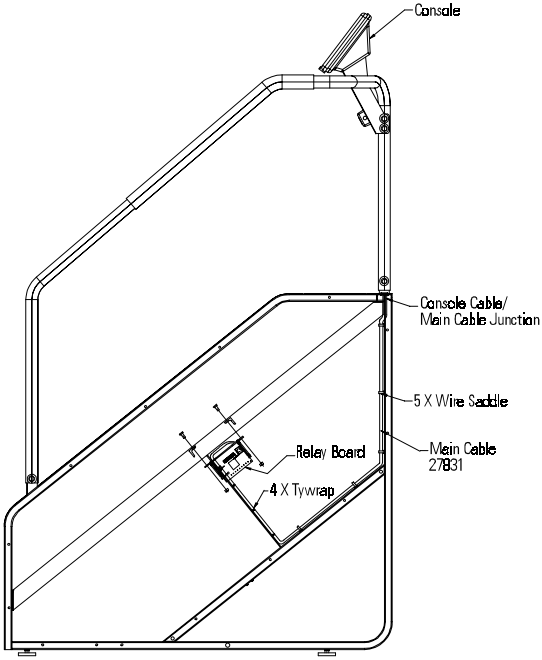

3. Hold the console connector and pull the console cable up and out of the handrails.

4. Reinstall the console cable by pushing the white plastic connector end down through the handrails. Do not connect the console, and the main cables.

5. Remove the main cable from the wire saddles.

6. Unplug the white plastic connector labeled J1 on the relay assembly circuit board.

7. Cut the four tyraps on the vertical support.

8. Remove the main cable from the frame.

9. To reinstall, place the main cable into the wire saddles. Reattach the cable to the vertical support with four tyraps.

10. Plug the white plastic connector of the main cable into the relay assembly circuit board at the spot labeled J1.

11. Plug the console cable into the back of the console. Reattach the console to the handrail mount. Plug the connectors together at the main cable/console cable junction.

12. Reinstall the right side cover. Reconnect the DC power cable.

TRANSMISSION ASSEMBLY

1. Remove the left and right side covers.

2. Remove the step positioned in the middle of the staircase.

3. Remove the drive chain.

4. Remove the Poly-V belt. Inspect the belt for wear. Replace the belt if it is cracked, worn, torn, or cut.

5. Remove the transmission bracket by loosening and removing the mounting hardware on the alternator and the transmission.

6. Remove the transmission brace by loosening and removing the mounting hardware from the transmission and the frame.

7. Support the transmission while loosening and removing the four transmission mounting bolts. Remove the transmission and rubber pad from the frame (See Drawing Below).

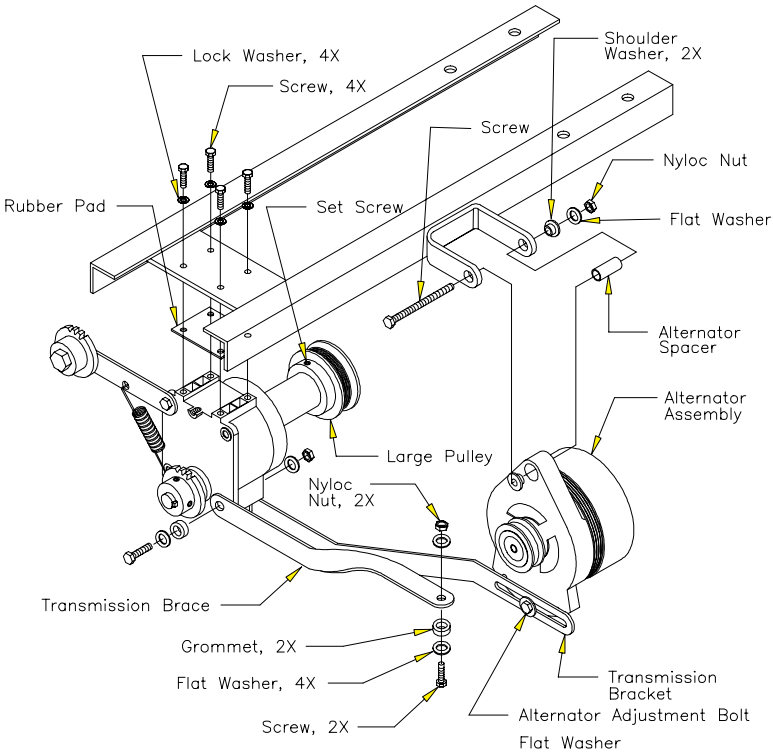

8. Reinstall the transmission by reversing the removal procedures.

9. Ensure the Poly-V belt is tensioned according to the procedures outlined in the “Poly-V Belt” section of this Manual.

ALTERNATOR ASSEMBLY

1. Remove the right and left side covers.

2. Remove the step positioned in the middle of the staircase.

3. Remove the wiring from the alternator terminals, noting the origin and color of the wires removed from each terminal.

4. Remove the Poly-V belt. Inspect the belt for wear. Replace the belt if it is cracked, worn, torn, or cut.

5. Remove the alternator adjustment bolt (See Drawing on Pg. 51).

6. Remove the nut, bolt and mounting hardware from the alternator bracket. Remove the alternator from the frame.

7. Reinstall the alternator by reversing the removal procedures. Be sure to verify the wiring connections.

8. Ensure the Poly-V belt is tensioned correctly (See Drawing Below).

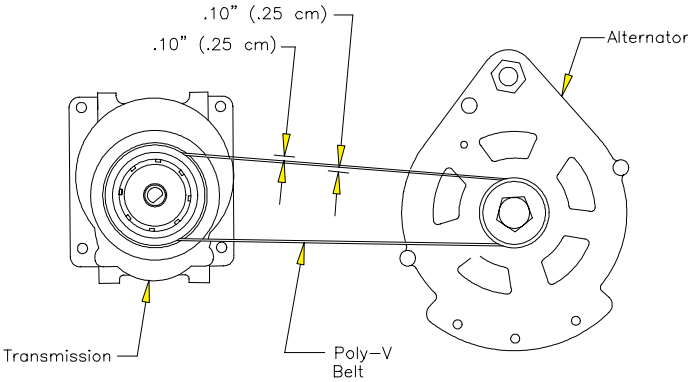

RELAY/RESISTOR ASSEMBLY

1. Remove the left side cover.

2. Remove the step positioned in the middle of the staircase.

3. Remove the wiring from the alternator terminals, noting the origin and color of the wires that are removed from each terminal.

4. Unplug the main cable connector from the J1 position on the relay circuit board.

5. Unplug the power connector from the J2 position on the relay circuit board.

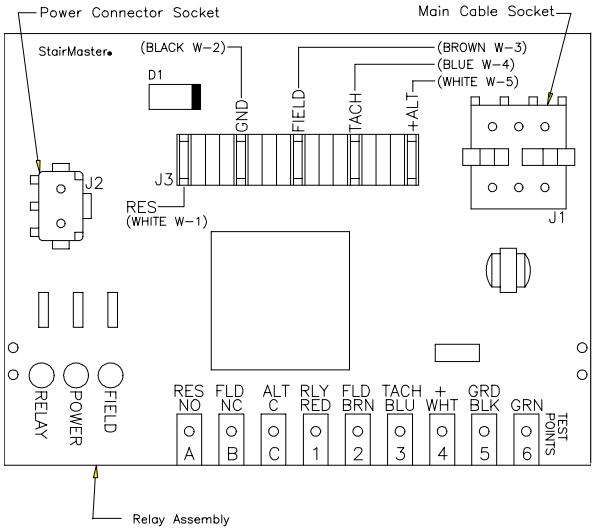

6. Loosen and remove the four mounting bolts and remove the relay/resistor assembly from the frame.

7. Reinstall the relay/resistor assembly in the reverse order. Verify the wiring connections before attaching the side cover.

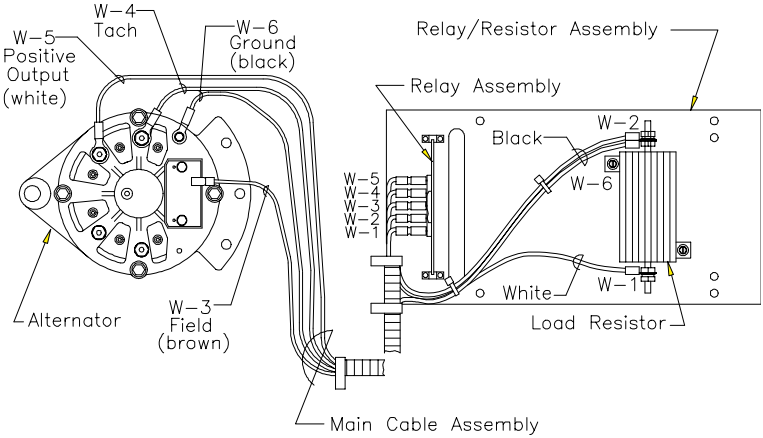

GROUNDING INSTRUCTIONS

The machine must be grounded. If it should malfunction or break down, grounding provides the path of least resistance for the electric current, thereby reducing the risk of electric shock. This machine is equipped with a cord having an equipment-grounding conductor and a grounding plug that looks like the plug illustrated in sketch A in the Drawing below. International machines may vary. It must be plugged into an appropriate outlet that is properly installed and grounded in accordance with all local codes and ordinances.

DANGER

IMPROPER CONNECTION OF THE EQUIPMENT-GROUNDING CONNECTOR CAN RESULT IN THE RISK OF ELECTRIC SHOCK. CHECK WITH A QUALIFIED ELECTRICIAN OR SERVICE PERSON IF YOU ARE IN DOUBT AS TO WHETHER THE MACHINE IS PROPERLY GROUNDED. DO NOT MODIFY THE PLUG PROVIDED WITH THIS MACHINE. IF IT WILL NOT FIT THE AVAILABLE OUTLET, HAVE A PROPER OUTLET INSTALLED BY A QUALIFIED ELECTRICIAN.

A temporary adapter that looks like the adapter illustrated in sketches B and C may be used to connect this plug to a two-pole receptacle as shown in sketch B if a properly grounded outlet is not available. The temporary adapter should be used only until a properly grounded outlet (sketch A) can be installed by a qualified electrician. The green colored lug extending from the adapter must be connected to a permanent ground such as a properly grounded outlet box cover. Whenever an adapter is used, it must be held in place by a metal screw.

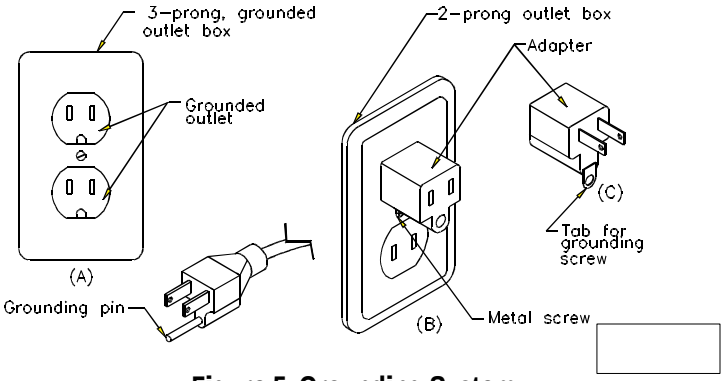

Figure 5: Grounding System

This equipment has been tested and found to comply with the limits for a Class A digital device, pursuant to Part 15 of the FCC rules. These limits are designed to provide reasonable protection against harmful interference when the equipment is operated in a commercial environment. This equipment generates, uses, and can radiate radio frequency energy and, if not installed and used in accordance with the instruction manual, may cause harmful interference to radio communications. Operation of equipment in a residential area may cause harmful interference in which case the user will be required to correct the interference at his own expense.

WARNING

CHANGES OR MODIFICATIONS TO EQUIPMENT NOT EXPRESSLY APPROVED BY STAIRMASTER® HEALTH & FITNESS PRODUCTS, INC. COULD VOID THE USER'S AUTHORITY TO OPERATE THIS EQUIPMENT.

CANADIAN DOC CLASS A COMPLIANCE

This digital apparatus does not exceed the Class A limits for radio emissions from digital apparatus set out in the radio interference regulations of the Canadian Department of Communications.

La présent appareil numérique ne dépasse pas les limites etablies pour les bruits radioélectriques applicables aux appareils numériques de la Class A prescrites dans les règlements sur le brouillage radioélectrique édicté par le Ministère des Communications du Canada.

IMPORTANT PHONE NUMBERS

If you need assistance, please have both the serial number of your machine and the date of purchase available when you contact the appropriate StairMaster® Health & Fitness Products, Inc. office listed below.

OFFICES IN THE UNITED STATES

CORPORATE HEADQUARTERS
12421 Willows Road NE, Suite 100
Kirkland, WA 98034
(800) 635-2936 or (425) 823-1825
FAX: (425) 823-9490
www.stairmaster.com

CUSTOMER SERVICE
12421 Willows Road NE, Suite 100
Kirkland, WA 98034
(800) 331-3578
FAX: (425) 814-0601
E-mail: customerservice@stairmaster.com

INTERNATIONAL OFFICES AND DISTRIBUTORS

For technical assistance and a list of distributors in your area, please call or fax one of the following numbers.

INTERNATIONAL DIVISION
(425) 823-1825
FAX: (425) 820-7505
E-Mail: intlservice@stairmaster.com

ASIA PACIFIC HEADQUARTERS
Telephone/Fax:+81-45-590-5686
E-mail: stairintl@aol.com

EUROPE: HEADQUARTERS
+41-91-827-3801
FAX: +41-91-827-8902
E-Mail: stairmasterch@swissonline.ch

GERMANY: HEADQUARTERS
+49-2204/610-27
FAX: +49-2204/628-90
E-Mail: stairmaster.de@t-online.de

U.K.: HEADQUARTERS
+44-1908/267-345
FAX: 44-1908/267-346
E-mail: stairmasteruk@msn.com

Figure 6: Side Cover and Handrail Assemblies

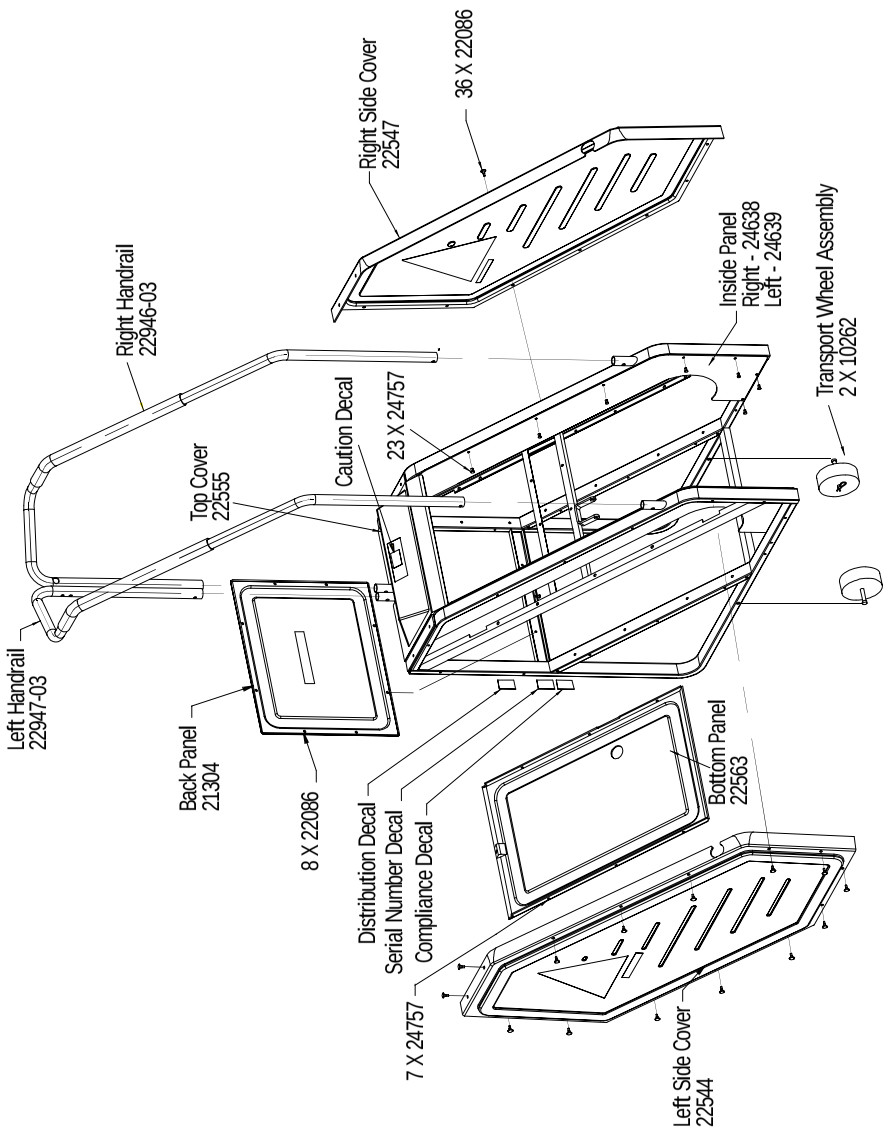

Figure 7: Cover Fasteners

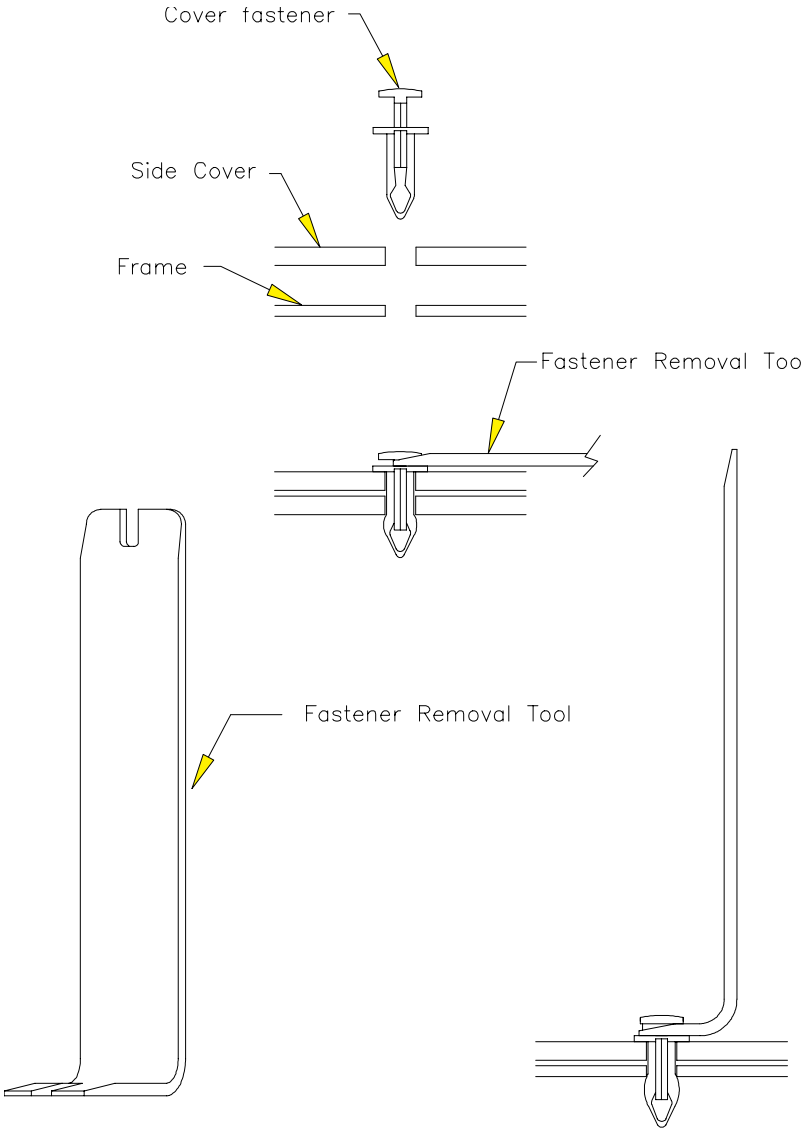

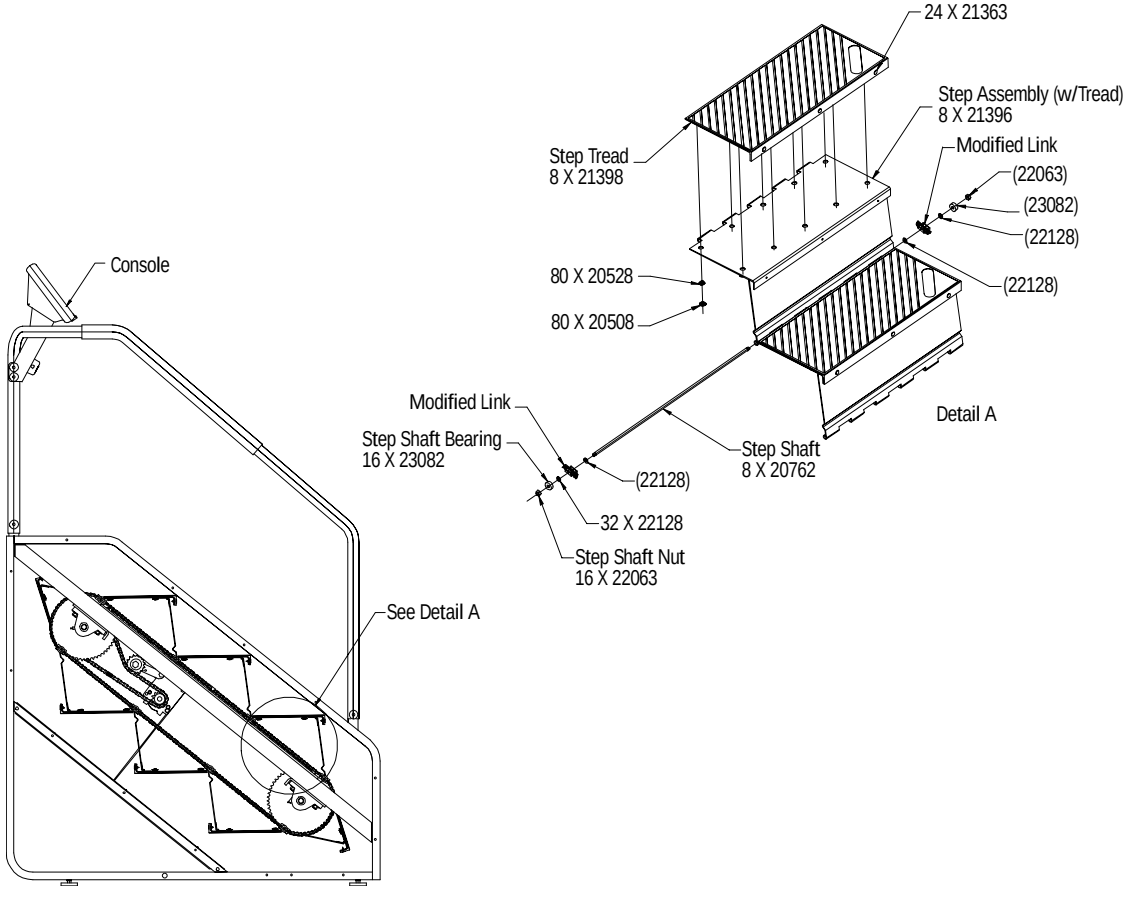

Figure 8: Step Assembly

Figure 9: Step Chain and Sprocket Assemblies

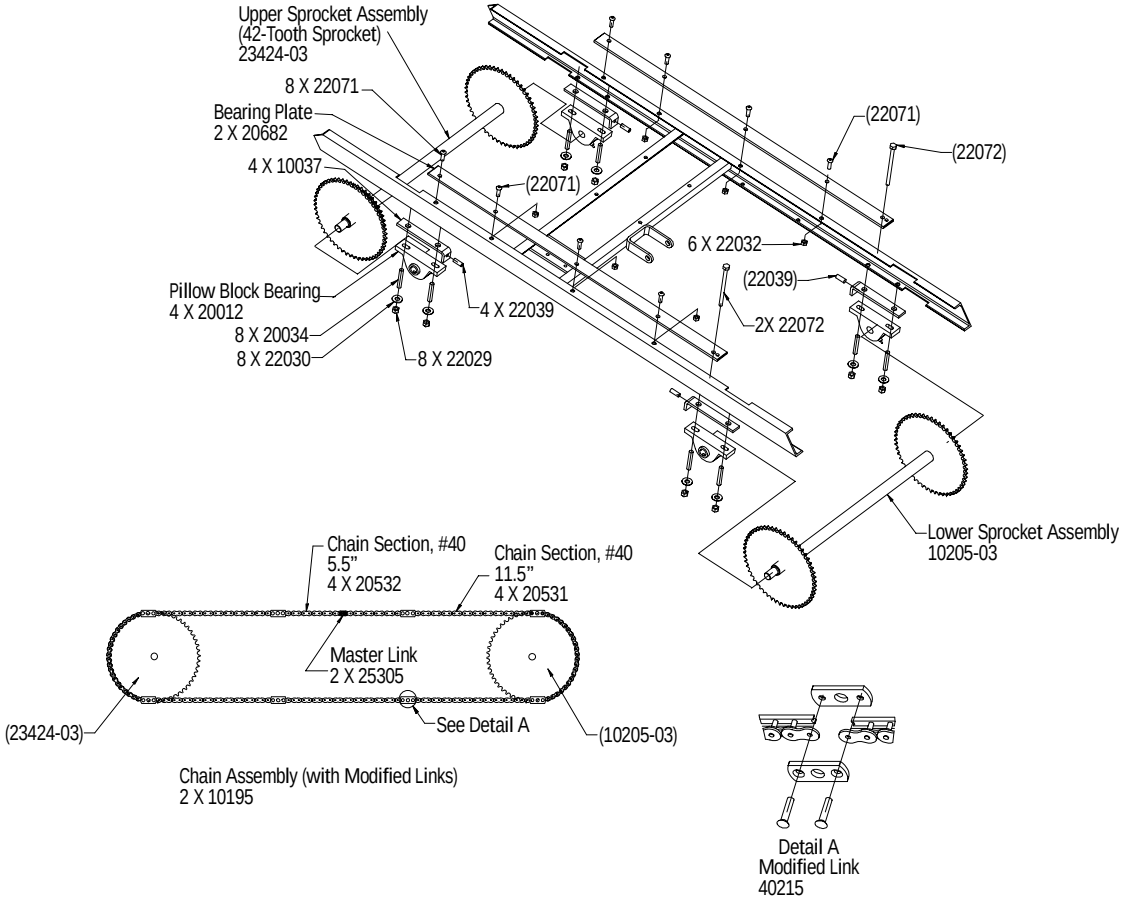

Figure 10: Transmission and Alternator Assemblies

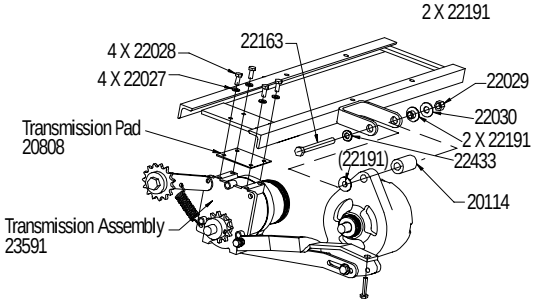

Transmission Assembly Mounting to the Frame

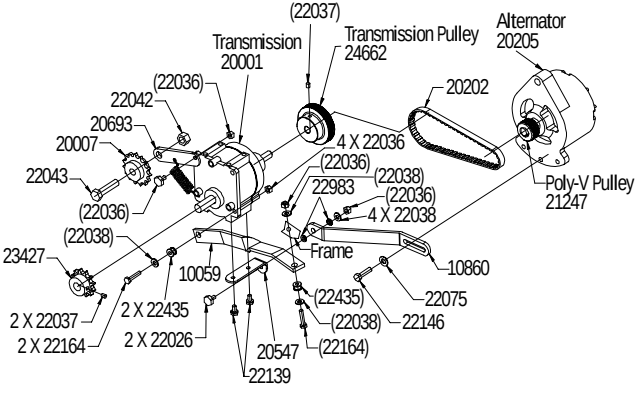

Transmission Assembly

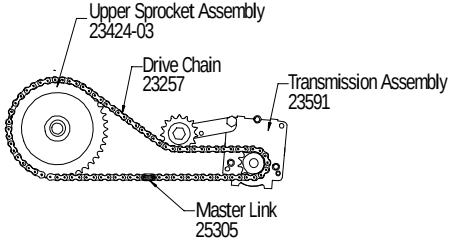

Drive Chain Assembly

Figure 11: Wiring Diagram

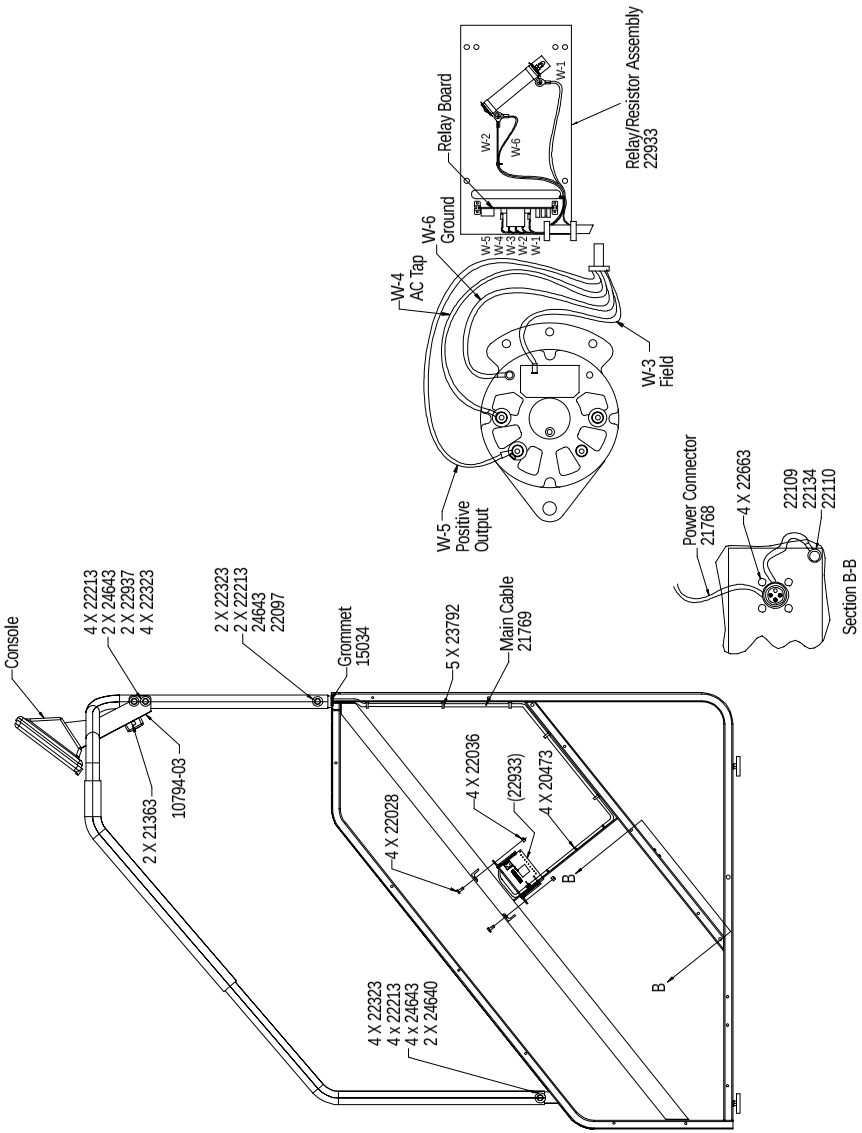
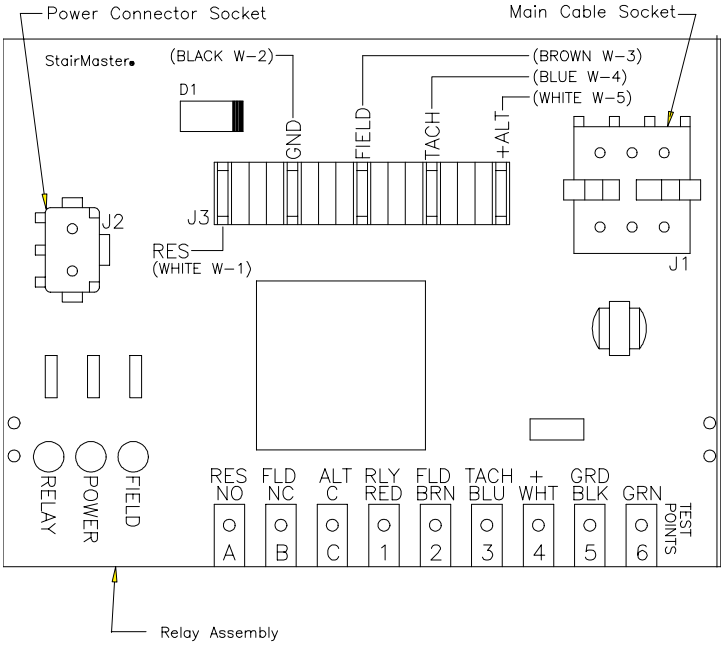
Figure 12: Relay Board